PE VALVE
a JW Cannon Company

World Class Specialty Manufacturing

Highest quality valves since 1959
50+ YEARS

- Easy, Efficient & Flexible
- Custom & Standard Valve Designs
- Residential, Commercial & Industrial

STRATEGIC MISSION STATEMENT

As a manufacture specializing in the design, engineering, and service of products for the refrigeration industry, it is P.E. Valve Company's strategic mission:

- *To consistently provide its customers with high-quality products at the lowest possible cost, and*
- *To further develop and nurture "partnerships" with our customers through a commitment to superior Service, quality, and responsiveness to our customers needs.*

P.E. Valve Company, Inc. maintains a commitment to produce the finest valves and related products in the world. This dedication has made P.E. Valve a leader in the refrigeration industry since 1959.

As a full service organization, PE Valve offers a complete package of technical services, including new product design, prototyping, engineering, manufacturing, production control, sales, and marketing to satisfy the needs of companies like your own.

Whether you need a few parts or a large volume of parts, PE Valve is here to meet your needs. Should you have any questions about our company, services, or full line of products, please contact us.

PE Valve Company, Inc.
485 Walnut Hill Road
Campobello, SC 29322
www.pevalve.com

Phone: (864) 472-9091
Fax: (864) 472-9119

Email: stancannon@pevalve.com

P.E. VALVE COMPANY

We are a manufacture of refrigeration valves and have been servicing the refrigeration industry with the highest quality valves since 1959.

Listed below are a few things that you should know about PE Valve:

- **We manufacture split condenser, heat reclaim, hot gas defrost, and solenoid valves for the H & AC industry.**
- **We make the most efficient valves in the business.**
- **Our valves range in capacity from 5 ton to 175 ton and are rated for 650 PSI working pressure.**
- **We make the only serviceable heat pump reversing valve in the business.**
- **Our control coils are fully interchangeable, i.e. each coil will fit any valve we make.**
- **The basic features of our valves are readily customized to meet your engineering needs, Including applications such as pressure drop control, liquid injection, or flow control.**
- **All valves can be made for ammonia use.**
- **Our valves are very competitively priced.**
- **We design valves to meet any special application that may be required.**

We supply valves to the supermarket industry for use in heat reclaim and split condenser applications. Our valves are installed by OEM rack and case manufactures, such as Kysor/Warren, Hill Phoenix, Hussmann, Zero Zone, and Tyler Refrigeration.

We supply Compressor **Unloading Valves** and various other valves to customers like York International, Carrier Corporation, Trane Company, Frick Company, Hydro-Temp, and Mammoth.

Additional products include a line of **On/Off**, **Directional Flow**, and **Hot Gas Defrost Valves**.

If you have any further questions, please contact us. We look forward to hearing from you.

The unique design and operational features of PE 4-way valves will dramatically increase the efficiency of virtually every heat pump you manufacture. Our shear-action type valve design with a revolutionary spool and body, decrease pressure drop by more than 60% - compared to competitor valves in similar applications. Each valve maintains constant flow and minimizes pressure drop.

Exclusive, patented interchange spool design and logical placement of refrigerant passages reduces high/low-side leakage and minimizes metal-to-metal contact and wear. You obtain the highest BTU per watt output from PE Valves because of this exclusive design.

For example, assume you have a 2 PSI (0.14 bar) drop in your present 4-way refrigerant valve. Using a similar PE 4-way valve in this situation would reduce that pressure drop 60% or to just .8 PSI (.055 bar). In a 5-ton system, this would represent an increase of approximately 4,000 BTU without any increase of input wattage. Other PE Valves are similarly efficient. Models are available up to 175 ton capacity.

Features That Make PE Valves

Extra Dependable And Energy Efficient

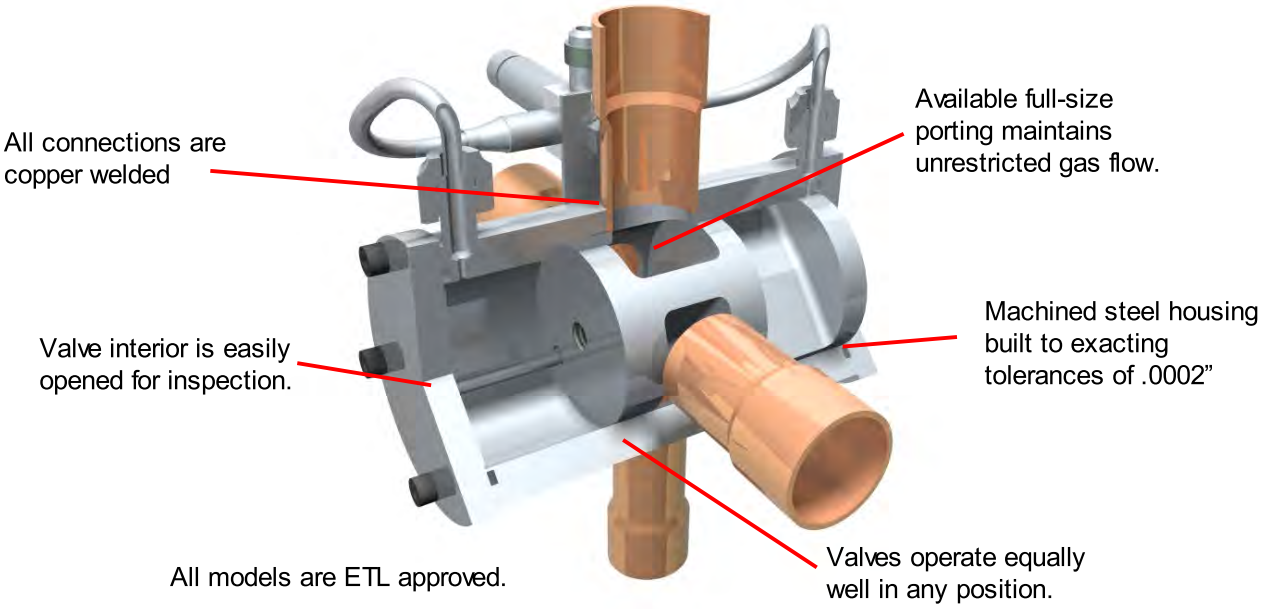

HOW IT WORKS . . .

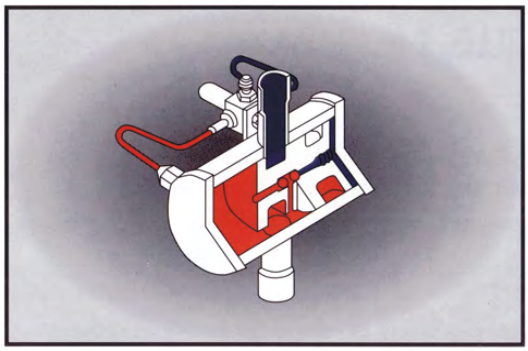

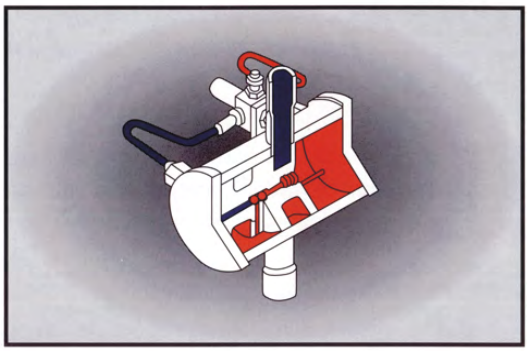

All PE reversing valves, 2-way, 3-way, or 4-way, work on the same basic principles. They function to cause a positive change in the direction of refrigerant flow within the system. The pin guided interchange spool opens or shuts discharge and suction ports through the direction of pressure differentials between the high and low side of the system. The reversing valve consists of the main body, a pilot solenoid valve body, and a special PE coil. Many valves in field service have been cycled over 1,000,000 times without malfunction.

Since 1959, These Components Have Made PE Valves A "Best Buy" In The Industry.

Valve Specifications

Minimum/Maximum P to reverse	25/500 psi
Maximum normal working pressure	650 psi
Minimum burst pressure	3250 psi
Maximum operating temperature	300° F
Known compatible refrigerants	R12, R13, R22, R23, R134a, R401a, R401b, R402a, R402b, R404a, R407c, R-408a, R409a, R410a, R500, R502, R503, R507, R508b
Minimum life	200,000 cycles
Mounting position	Any

Pilot Solenoid Valves

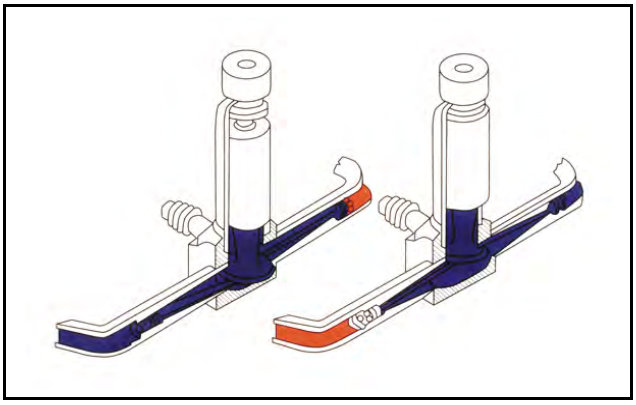

Built into every PE reversing valve is a pilot solenoid, which alternately opens and closes the gas paths from the end of the chambers. This permits high-pressure refrigerant in one of the end chambers to reverse the position of the interchange spool. As the solenoid is energized, a gas path is closed to suction; when it is de-energized, the original open and closed gas paths are obtained.

Custom PE Valves

The basic design construction features and components of PE valves can be altered into many custom-made special valve models. Tell us your application and we'll be happy to design and build custom valves for your application.

Continuous Duty PE Coils

ETL approved, the PE coils can be energized under normal circumstances without danger of any type of failure. The PE coils can be used with single-phase power systems. Designed for use where high or low ambient temperatures prevail. PE coils are suited for low temperature applications where moisture or humidity are present, where condensation is a problem, and in defrosting systems where fungus resistance is necessary.

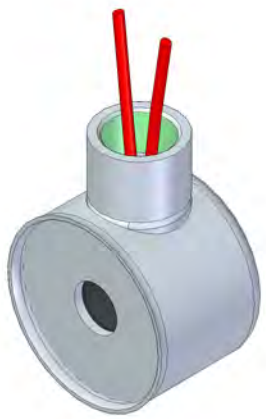

COIL SPECIFICATION TABLE

COIL			LEAD
Volts	**Watts**	**Color**	**Length (Insulation)**
12V DC	11	Black	24" (1/32")
24V DC	11	Green	24" (1/32")
24V AC	11	Red	60" (1/32")
120V AC	11	White	60" (1/32")
208/240V AC	11	Yellow	60" (1/32")

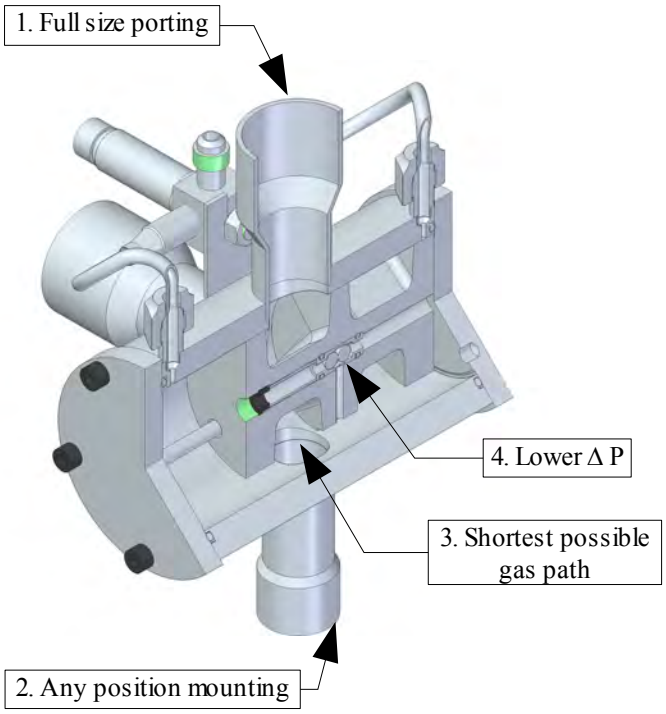

Compare These Features . . . .
4 Good Reasons To Specify PE Valves

SPECIFICATIONS

SERVICE: Refrigerants (most) or ammonia on request
MAXIMUM WORKING PRESSURE: 650 PSI
MAXIMUM OPERATING PRESSURE: 350 Differential
CYCLES: 50 - 60
COIL LEADS: #18 AWG lead wire, varied lengths with 2/64 – 4/64 insulation

Warranty

PE valves are warranted to be free from defects for one year from date of purchase. Contact the sales department for complete details.

Installation of PE Valves

If possible, the valve should be installed with sil-fos copper solder as it relieves the possibility of flux getting between the spool and the valve wall, any flux will completely stop the spool from shifting.

All tubes should be entered into the valve connections before brazing so that no undue stress is placed on the valve.

If possible, the valve should be mounted with the coil in a position where it will drain off any accumulation of water.

Use of wet rags or any water-cooling should be avoided as steam or water can cause minor rust which will get between the spool and the valve wall thereby making the valve inoperable.

Do not clamp the body with any type of clamp as this can distort the valve, since the valve is fitted to very close tolerances. Any clamp should be placed on the tubing six tube diameters away from the valve body, making sure that all tubes have room to expand and contract. Remember that the interchange tubing alternate from hot to cold.

Mounting brackets can be installed on PE Valves during manufacturing, please submit a drawing of your bracket.

Sizing of PE Valves

One good rule of thumb regarding sizing of PE Valves in a system is, that the pressure drop through the valve will be equivalent to a short radius elbow plus five percent; i.e. if the actual tube size going into the valve is 7/8” (22.225 mm), then use the data for a 7/8” (22.225 mm) short radius elbow plus five percent.

Service of PE Valves

Troubleshooting Tips For A Non-Functioning Valve

When attempting to service a non-functioning valve installed in a system; please note that it is rarely the spool or body at fault. So it is highly unlikely that the body will have to be taken out of the system.

1) Loosen Clamps:

If there are any clamps around the valve body, loosen them. If there are clamps on the tubing within six tube diameters of the body, loosen them also. If there is anything stopping the tubing from expanding or contracting, such as a bulkhead or wall, make sure that the tubing has the freedom to move.

2) Check If Coil Is Being Energized:

With the coil energized, place a piece of steel or a screwdriver on the screw holding the coil. A faint buzzing or magnetic pull should be felt. After ascertaining that the coil is functioning properly, the pilot is most likely to be the problem and should be replaced if in the past the valve had been operating successfully.

3) If The Problem Still Persists:

Check the valve and spool assembly for operation by installing a gage set with one hose connected to one end of the valve and the other hose to the opposite end with the third hose connected to the suction. The valve can then be operated with the gage hand valves.

4) If The Valve Is Still Inoperable:

It is probable that the spool is too tight within the body. Remove the gas from the system and remove the end caps by loosening the bolts on both ends of the valve simultaneously so that there is no gas pressure on either end. **(DO NOT REMOVE ONE END CAP WITHOUT CHECKING THAT THERE IS NO TRAPPED PRESSURE AT THE OTHER END).** After removing the end caps, try moving the spool. If the spool is too tight, 90% of the time the valve is under stress from the tubing and these stresses can be alleviated by heating up all the lines 10" away from the valve, with a rosebud tip, to approximately 1000 degree Fahrenheit. This should relax the lines and free up the spool. If the spool was exceedingly tight, carefully inspect the O.D. of the spool for small shiny spots. The presence of these spots would indicate that the spool has been damaged by something passing through the valve or being hit with a hard object. Any burrs or shiny spots may be taken off with a hand stone **(DO NOT UNDER ANY CIRCUMSTANCES SAND PAPER THE SPOOL, IT IS FITTED TO VERY CLOSE TOLERANCES AND WILL NOT ENTER THE BODY UNLESS VERY ACCURATELY ALIGNED).** Carefully clean the spool and body. Then re-oil the spool and carefully place it back into the body.

5) If The Spool Is Still Too Tight:

On **rare** occasions, you may see what appear to be orange or brown stains in the body. It is possible for this to be copper plating caused by moisture in the system, the spool will be too tight to move and may score the body when being taken out, this valve needs to be replaced and the system dried out and the drier changed.

Refrigerants

Refrigerants of compounded compounds can fractionate, we recommend keeping the valve in a cabinet above freezing. Also these refrigerants can have "Glide" when one of the components boils before another. Valves operated near these flash points may have shifting problems. For specific information, contact PE Valve.

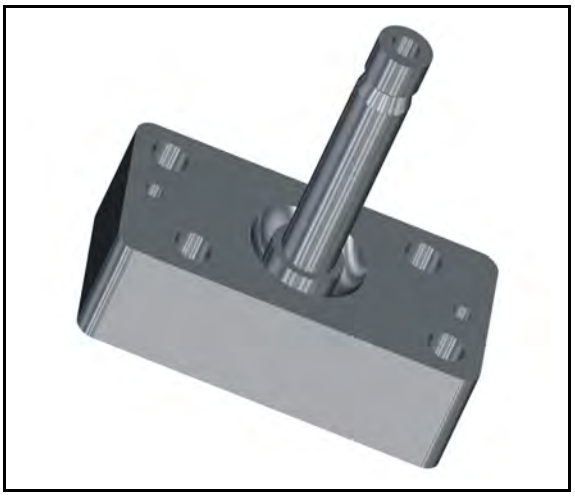

The following compressor unloading valves are available from PE Valve Company. Contact the sales department for pricing and delivery. NOTE: Valves can be assembled normally open or normally closed. Port locations can be on any surface on the base. Ports can be any style, pipe thread, tube fitting, or drilled as shown for manifold mounting with optional locations.

York Compressors
BSV901
BSV901EP
BSV1401
BSV1401EP
BSV1402
BSV3701
BSV1001
BSV1002
BSV3902
BSV3902/17-23
BSV3902/1722

Fedders
BSV3101

York/Linge
BSV806-1
BSV806-2

ThermoKing

BSV806-1
BSV3802
BSV3301/12V
BSV3301/24V
BSV3802/12V1619

Schnake
BSV2401

McQuay
BSV2701

Trane
BSV2001
BSV2101
BSV2301
BSV2901

Copeland
BSV3201

Westinghouse
BSV2501

Frick
BSV401

Valve Sizing

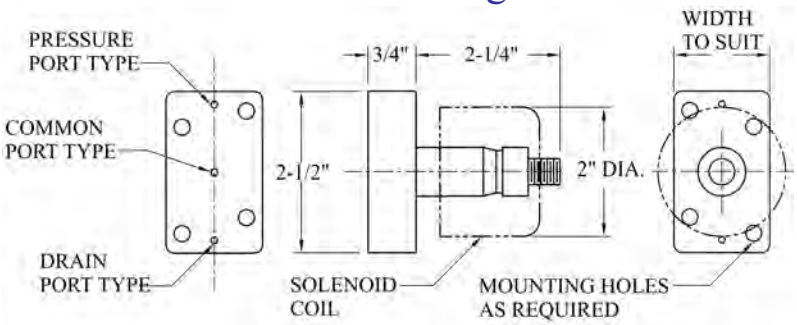

100 Series
Heat Pump Reversing
4 Way Valves

Sizes 03 Thru 21

½" Thru 3-1/8" Line Sizes

Valve Operation

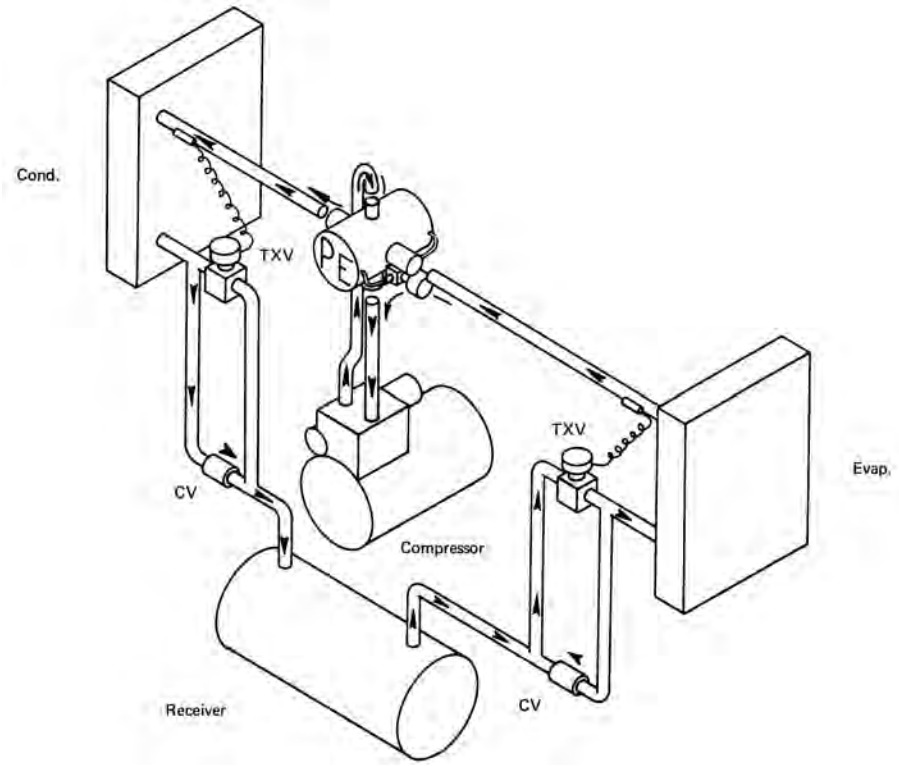

100 Series

In the heating cycle the discharge gas is routed through the inside coil making it the condenser and the outside coil the evaporator. In the coiling cycle the discharge gas is routed through the outside coil making it the condenser and the inside coil the evaporator.

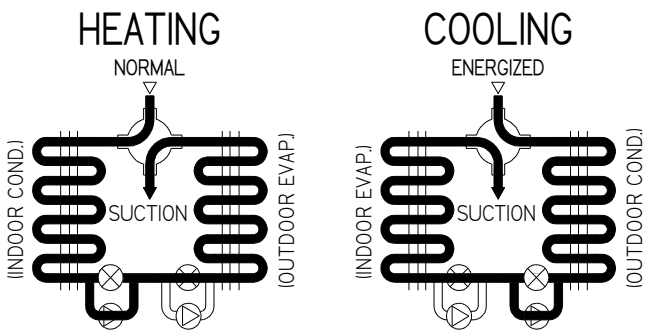

Valve Sizing

Valve		Connections ODF (mm)			MOPD	Max Working	Weight lbs.	
Size	Porting	Discharge (A)	Interchanges (B)	Suction	(bar)	Pressure (bar)	Net (kg)	Ship (kg)
103-1	Full	**1/2"** (12.7)	**5/8"** (15.88)	**5/8"** (15.88)	**500** (34.47)	**650** (44.82)	**2-3/4** (1.25)	**3-1/4** (1.47)
103-2	Same as above	**1/2"** (12.7)	**3/4"** (19.05)	**3/4"** (19.05)	**500** (34.47)	**650** (44.82)	**2-3/4** (1.25)	**3-1/4** (1.47)
106-1	Full	**5/8"** (15.88)	**7/8"** (22.23)	**7/8"** (22.23)	**500** (34.47)	**650** (44.82)	**4** (1.81)	**5** (2.27)
106-2	Same as above	**5/8"** (15.88)	**1-1/8"** (28.58)	**1-1/8"** (28.58)	**500** (34.47)	**650** (44.82)	**4** (1.81)	**5** (2.27)
107-1	Full	**7/8"** (22.23)	**1-1/8"** (28.58)	**1-1/8"** (28.58)	**500** (34.47)	**650** (44.82)	**6-3/4** (3.06)	**8** (3.63)
107-2	Same as above	**7/8"** (22.23)	**1-3/8"** (34.93)	**1-3/8"** (34.93)	**500** (34.47)	**650** (44.82)	**6-3/4** (3.06)	**8** (3.63)
109-1	Full	**1-1/8"** (28.58)	**1-3/8"** (34.93)	**1-3/8"** (34.93)	**500** (34.47)	**650** (44.82)	**9-1/2** (4.31)	**12** (5.44)
109-2	Same as above	**1-1/8"** (28.58)	**1-5/8"** (41.28)	**1-5/8"** (41.28)	**500** (34.47)	**650** (44.82)	**9-1/2** (4.31)	**12** (5.44)
112-1	Full	**1-3/8"** (34.925)	**1-5/8"** (41.28)	**1-5/8"** (41.28)	**500** (34.47)	**650** (44.82)	**23** (10.43)	**25-1/2** (11.57)
112-2	Same as above	**1-3/8"** (34.93)	**2-1/8"** (53.98)	**2-1/8"** (53.98)	**500** (34.47)	**650** (44.82)	**23** (10.43)	**25-1/2** (11.57)
115-1	Full	**1-5/8"** (41.28)	**2-1/8"** (53.98)	**2-1/8"** (53.98)	**500** (34.47)	**650** (44.82)	**49-1/2** (22.45)	**59** (26.76)
118-1	Full	**2-1/8"** (53.98)	**2-5/8"** (66.68)	**2-5/8"** (66.68)	**500** (34.47)	**650** (44.82)	**81.9** (37.15)	**91.8** (41.64)
121-1	Full	**2-5/8"** (66.68)	**3-1/8"** (79.38)	**3-1/8"** (79.38)	**500** (34.47)	**650** (44.82)	**106** (48.08)	**117** (53.07)

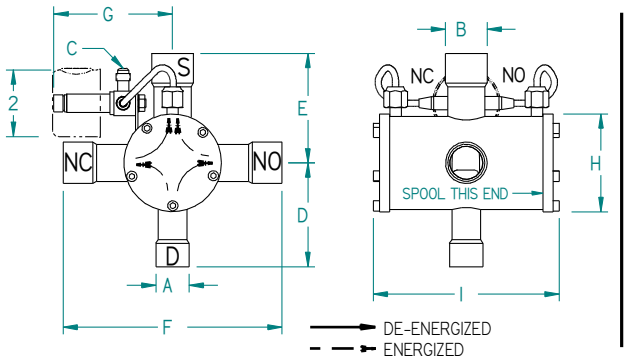

Sizes 03 thru 12

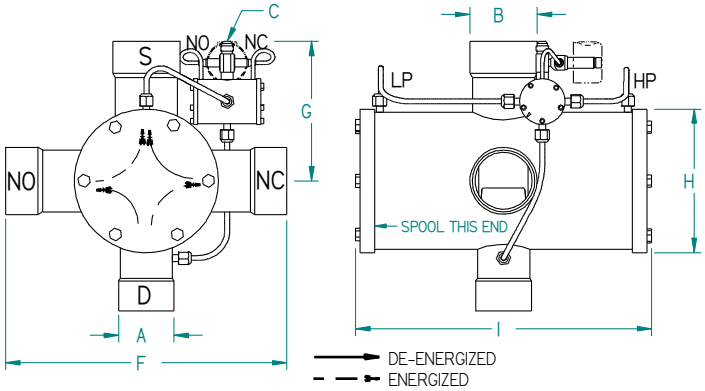

Sizes 15 thru 21

Valve Dimensions – nominal inches (actual) (mm)

Size	Flare (C) **Pipe to Suction**	(D)	(E)	(F)	(G)	(H)	(I)
103-1	No Flare	**2-13/32"** (2.42") (61.3)	**3-1/8"** (3.14") (79.6)	**5-9/32"** (5.27") (133.9)	**3-1/32"** (3.02") (76.7)	**2-5/16"** (2.3") (58.4)	**3-11/16"** (3.69") (93.6)
103-2	No Flare	**2-13/32"** (2.42") (61.3)	**3-1/8"** (3.12") (79.1)	**5-9/32"** (5.27") (133.9)	**3-1/32"** (3.02") (76.7)	**2-5/16"** (2.3") (58.4)	**3-11/16"** (3.69") (93.6)
106-1	**1/4"** (6.4)	**2-9/16"** (2.55") (64.8)	**2-21/32"** (2.67") (67.8)	**5-11/32"** (5.34") (135.6)	**3-17/32"** (3.55") (90.1)	**2-9/16"** (2.55") (64.8)	**4-3/8"** (4.37") (111)
106-2	**1/4"** (6.4)	**2-9/16"** (2.55") (64.8)	**3-5/16"** (3.32") (84.3)	**6-5/8"** (6.64") (168.7)	**3-17/32"** (3.55") (90.1)	**2-9/16"** (2.55") (64.8)	**4-3/8"** (4.37") (111)
107-1	**1/4"** (6.4)	**3-7/16"** (3.44") (87.4)	**3-5/16"** (3.32") (84.3)	**6-5/8"** (6.64") (168.5)	**3-19/32"** (3.6") (91.5)	**2-31/32"** (2.96") (75.2)	**5-21/32"** (5.64") (143.3)
107-2	**1/4"** (6.4)	**3-7/16"** (3.44") (87.4)	**3-21/32"** (3.64") (92.5)	**7-9/32"** (7.29") (185)	**3-19/32"** (3.6") (91.5)	**2-31/32"** (2.96") (75.2)	**5-21/32"** (5.64") (143.3)
109-1	**1/4"** (6.4)	**3-1/2"** (3.51") (89)	**3-23/32"** (3.73") (94.7)	**7-15/32"** (7.46") (189.5)	**3-21/32"** (3.67") (93.2)	**3-11/32"** (3.33") (84.6)	**6-1/2"** (6.52") (165.5)
109-2	**1/4"** (6.4)	**3-1/2"** (3.51") (89)	**4-7/32"** (4.23") (107.4)	**8-15/32"** (8.46") (214.9)	**3-21/32"** (3.67") (93.2)	**3-11/32"** (3.33") (84.6)	**6-1/2"** (6.52") (165.5)
112-1	**1/4"** (6.4)	**4-1/32"** (4.03") (102.3)	**4-17/32"** (4.53") (115)	**9-1/16"** (9.05") (229.9)	**4-1/8"** (4.14") (105.1)	**4-5/32"** (4.15") (105.4)	**8-17/32"** (8.54") (216.8)
112-2	**1/4"** (6.4)	**4-1/32"** (4.03") (102.3)	**5-3/8"** (5.38") (136.6)	**10-3/4"** (10.75") (273.1)	**4-1/8"** (4.14") (105.1)	**4-5/32"** (4.15") (105.4)	**8-17/32"** (8.54") (216.8)
115-1	**3/8"** (9.5)	**4-15/16"** (4.95") (125.6)	**5-1/32"** (5.05") (128.1)	**10-3/32"** (10.09") (256.3)	**5-21/32"** (5.67") (143.9)	**5-7/16"** (5.45") (138.4)	**11-25/32"** (11.8") (299.6)
118-1	**3/8"** (9.5)	**5-9/16"** (5.57") (141.4)	**6-5/16"** (6.32") (160.4)	**12-5/8"** (12.63") (320.8)	**6-23/32"** (6.71") (170.5)	**6-3/4"** (6.75") (171.5)	**12-21/32"** (12.67") (321.8)
121-1	**3/8"** (9.5)	**6-9/16"** (6.56") (166.6)	**7-1/16"** (7.06") (179.3)	**14-1/8"** (14.12") (358.6)	**7-1/16"** (7.05") (179)	**7-1/4"** (7.25") (184.2)	**14-7/8"** (14.86") (377.5)

300 Series Heat Reclaim 4 Way Valves

Sizes 03 Thru 21

½" Thru 3-1/8" Line Sizes

Valve Operation

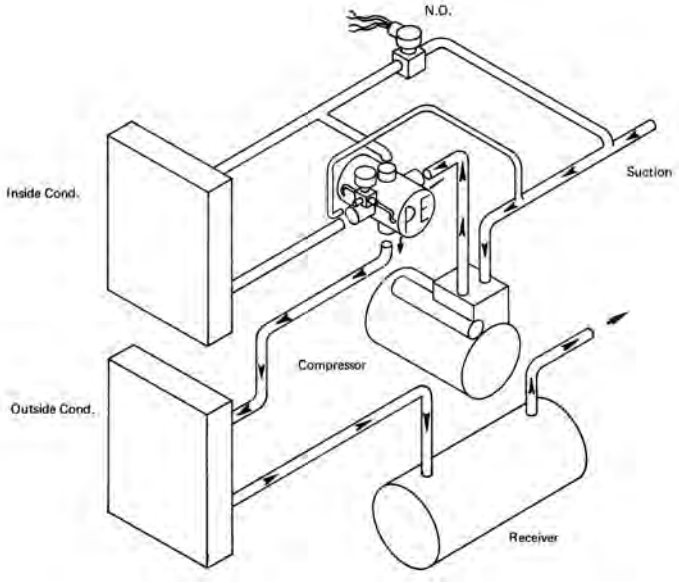

300 Series

These valves may be used in the system to direct flow.
NORMAL POSITION: The discharge gas is routed through the main condenser.
ENERGIZED POSITION: The discharged gas is routed through the auxiliary condenser and the return routed to the main condenser.

(NO CHECK VALVE NEEDED)

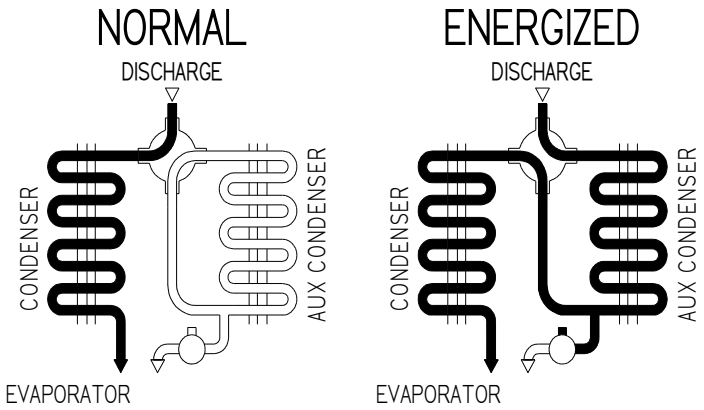

Valve Sizing

Valve Size	Porting	Connections ODF (mm) (A)	MOPD (bar)	Max Working Pressure (bar)	Weight lbs. (kg.) Net	Ship
303-1	Full	**5/8"** (15.9)	**500** (34.47)	**650** (44.82)	**2.75** (1.248)	**3.25** (1.474)
303-2	Same as above	**3/4"** (19.05)	**500** (34.47)	**650** (44.82)	**2.75** (1.248)	**3.25** (1.474)
306-1	Full	**7/8"** *(22.2)*	**500** (34.47)	**650** (44.82)	**4.9** (2.22)	**5.5** (2.49)
306-2	Same as above	**1-1/8"** *(28.6)*	**500** (34.47)	**650** (44.82)	**4.9** (2.22)	**5.5** (2.49)
307-1	Full	**1-1/8"** *(28.6)*	**500** (34.47)	**650** (44.82)	**7.2** (3.27)	**8** (3.63)
307-2	Same as above	**1-3/8"** *(34.9)*	**500** (34.47)	**650** (44.82)	**7.2** (3.27)	**8** (3.63)
309-1	Full	**1-3/8"** *(34.9)*	**500** (34.47)	**650** (44.82)	**8.7** (3.94)	**9.5** (4.31)
309-2	Same as above	**1-5/8"** *(41.3)*	**500** (34.47)	**650** (44.82)	**8.7** (3.94)	**9.5** (4.31)
312-1	Full	**1-5/8"** *(41.3)*	**500** (34.47)	**650** (44.82)	**17** (7.71)	**18.2** (8.26)
312-2	Same as above	**2-1/8"** *(54.0)*	**500** (34.47)	**650** (44.82)	**17** (7.71)	**18.2** (8.26)
315-1	Full	**2-1/8"** *(54.0)*	**500** (34.47)	**650** (44.82)	**49.5** (22.453)	**59** (26.762)
318-1	Full	**2-5/8"** *(66.7)*	**500** (34.47)	**650** (44.82)	**81.9** (37.149)	**91.8** (941.64)
321-1	Full	**3-1/8"** *(79.4)*	**500** (34.47)	**650** (44.82)	**91** (41.277)	**102** (46.266)

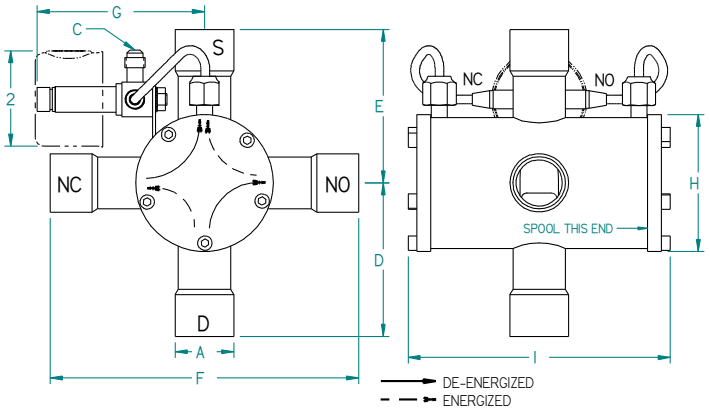

Sizes 03 thru 12

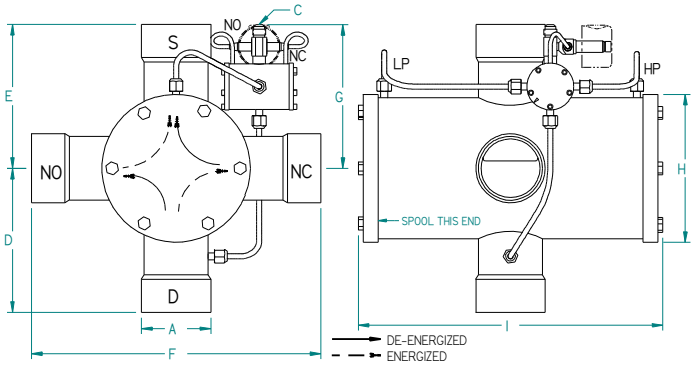

Sizes 15 thru 21

Valve Dimensions – nominal inches (actual) (mm)

Size	Flare (C) **Pipe to Suction**	(D)	(E)	(F)	(G)	(H)	(I)
303-1	**1/4"** (6.35)	**3-1/8"** (3.14") (79.6)	**3-1/8"** (3.14") (79.6)	**5-9/32"** (5.27") (133.9)	**3-1/32"** (3.02") (76.7)	**2-5/16"** (2.3") (58.4)	**3-11/16"** (3.69") (93.6)
303-2	**1/4"** (6.35)	**3-1/8"** (3.12") (79.1)	**3-1/8"** (3.12") (79.1)	**5-9/32"** (5.27") (133.9)	**3-1/32"** (3.02") (76.7)	**2-5/16"** (2.3") (58.4)	**3-11/16"** (3.69") (93.6)
306-1	**1/4"** (6.35)	**2-21/32"** (2.67") (67.8)	**2-21/32"** (2.67") (67.8)	**5-11/32"** (5.34") (135.6)	**3-17/32"** (3.55") (90.1)	**2-9/16"** (2.55") (64.8)	**4-3/8"** (4.37") (111)
306-2	**1/4"** (6.35)	**3-5/16"** (3.32") (84.3)	**3-5/16"** (3.32") (84.3)	**6-5/8"** (6.64") (168.7)	**3-17/32"** (3.55") (90.1)	**2-9/16"** (2.55") (64.8)	**4-3/8"** (4.37") (111)
307-1	**1/4"** (6.35)	**3-5/16"** (3.32") (84.3)	**3-5/16"** (3.32") (84.3)	**6-5/8"** (6.64") (168.5)	**3-19/32"** (3.6") (91.5)	**2-31/32"** (2.96") (75.2)	**5-21/32"** (5.64") (143.3)
307-2	**1/4"** (6.35)	**3-21/32"** (3.64") (92.5)	**3-21/32"** (3.64") (92.5)	**7-9/32"** (7.29") (185)	**3-19/32"** (3.6") (91.5)	**2-31/32"** (2.96") (75.2)	**5-21/32"** (5.64") (143.3)
309-1	**1/4"** (6.35)	**3-23/32"** (3.73") (94.7)	**3-23/32"** (3.73") (94.7)	**7-15/32"** (7.46") (189.5)	**3-21/32"** (3.67") (93.2)	**3-11/32"** (3.33") (84.6)	**6-1/2"** (6.52") (165.5)
309-2	**1/4"** (6.35)	**4-7/32"** (4.23") (107.4)	**4-7/32"** (4.23") (107.4)	**8-15/32"** (8.46") (214.9)	**3-21/32"** (3.67") (93.2)	**3-11/32"** (3.33") (84.6)	**6-1/2"** (6.52") (165.5)
312-1	**1/4"** (6.35)	**4-17/32"** (4.53") (115)	**4-17/32"** (4.53") (115)	**9-1/16"** (9.05") (229.9)	**4-1/8"** (4.14") (105.1)	**4-5/32"** (4.15") (105.4)	**8-17/32"** (8.54") (216.8)
312-2	**1/4"** (6.35)	**5-3/8"** (5.38") (136.6)	**5-3/8"** (5.38") (136.6)	**10-3/4"** (10.75") (273.1)	**4-1/8"** (4.14") (105.1)	**4-5/32"** (4.15") (105.4)	**8-17/32"** (8.54") (216.8)
315-1	**3/8"** (9.525)	**5-1/32"** (5.05") (128.1)	**5-1/32"** (5.05") (128.1)	**10-3/32"** (10.09") (256.3)	**5-21/32"** (5.67") (143.9)	**5-7/16"** (5.45") (138.4)	**11-25/32"** (11.8") (299.6)
318-1	**3/8"** (9.525)	**6-5/16"** (6.32") (160.4)	**6-5/16"** (6.32") (160.4)	**12-5/8"** (12.63") (320.8)	**6-23/32"** (6.71") (170.5)	**6-3/4"** (6.75") (171.5)	**12-21/32"** (12.67") (321.8)
321-1	**3/8"** (9.525)	**7-1/16"** (7.06") (179.3)	**7-1/16"** (7.06") (179.3)	**14-1/8"** (14.12") (358.6)	**7-1/16"** (7.05") (179)	**7-1/4"** (7.25") (184.2)	**14-7/8"** (14.86") (377.5)

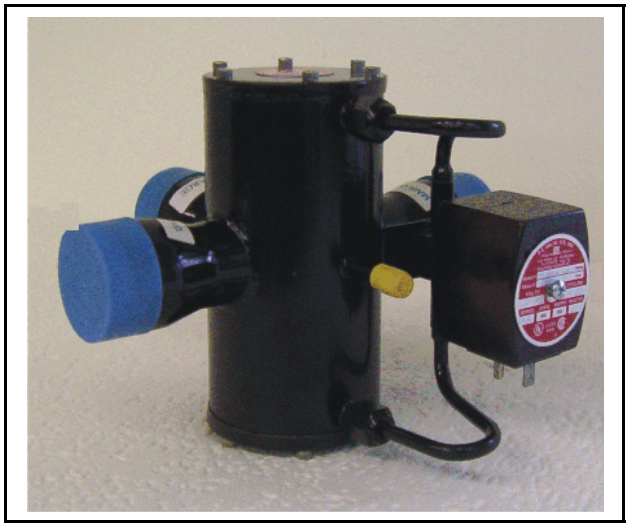

400 Series Heat Reclaim 3 Way Valves

Sizes 03 Thru 21

½" Thru 3-1/8" Line Sizes

Valve Operation

(3 Way)

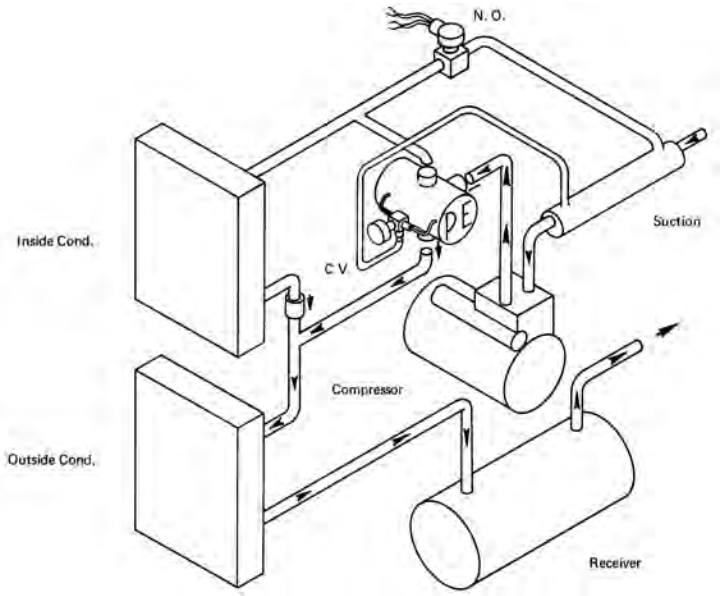

400 Series

These valves may be used in the system to direct flow.
In the de-energized position the discharge gas is routed through the main condenser. In the energized position, the discharged gas is routed through the main and the auxiliary condenser.

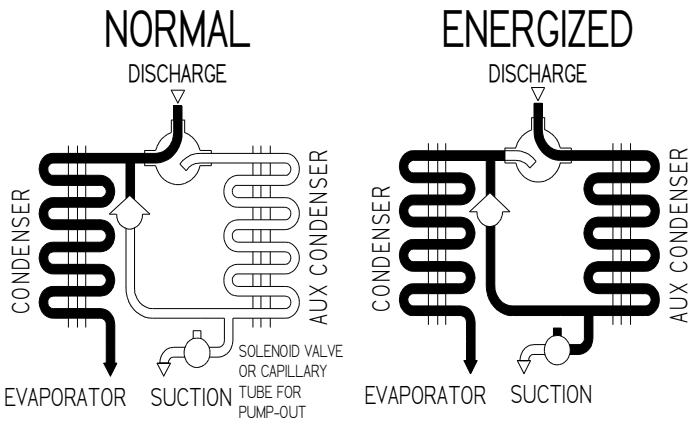

Valve Sizing

Valve Size	Porting	Connections ODF (mm) (A)	MOPD (bar)	Max Working Pressure	Weight lbs. (kg.) Net	Ship
403-1	Full	**5/8"** (15.88)	**500** (34.47)	**650** (44.82)	**2.75** (1.248)	**3.25** (1.474)
403-2	Same as above	**3/4"** (19.05)	**500** (34.47)	**650** (44.82)	**2.75** (1.248)	**3.25** (1.474)
406-1	Full	**7/8"** *(22.23)*	**500** (34.47)	**650** (44.82)	**4.9** (2.22)	**5.5** (2.49)
406-2	Same as above	**1-1/8"** *(28.58)*	**500** (34.47)	**650** (44.82)	**4.9** (2.22)	**5.5** (2.49)
407-1	Full	**1-1/8"** *(28.58)*	**500** (34.47)	**650** (44.82)	**7.2** (3.27)	**8** (3.63)
407-2	Same as above	**1-3/8"** *(34.93)*	**500** (34.47)	**650** (44.82)	**7.2** (3.27)	**8** (3.63)
409-1	Full	**1-3/8"** *(34.93)*	**500** (34.47)	**650** (44.82)	**8.7** (3.94)	**9.5** (4.31)
409-2	Same as above	**1-5/8"** *(41.28)*	**500** (34.47)	**650** (44.82)	**8.7** (3.94)	**9.5** (4.31)
412-1	Full	**1-5/8"** *(41.28)*	**500** (34.47)	**650** (44.82)	**17** (7.71)	**18.2** (8.26)
412-2	Same as above	**2-1/8"** *(53.98)*	**500** (34.47)	**650** (44.82)	**17** (7.71)	**18.2** (8.26)
415-1	Full	**2-1/8"** *(53.98)*	**500** (34.47)	**650** (44.82)	**49.5** (22.453)	**59** (26.762)
418-1	Full	**2-5/8"** *(66.68)*	**500** (34.47)	**650** (44.82)	**81.9** (37.149)	**91.8** (941.64)
421-1	Full	**3-1/8"** *(79.38)*	**500** (34.47)	**650** (44.82)	**91** (41.277)	**102** (46.266)

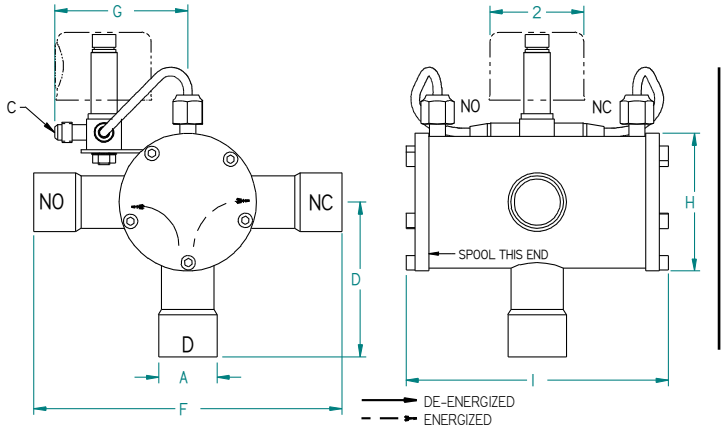

Sizes 03 thru 12

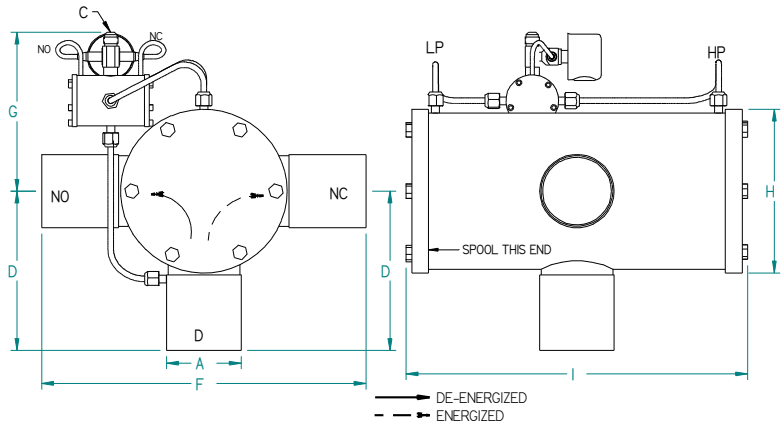

Sizes 15 thru 21

Valve Dimensions – nominal inches (actual) (mm)

Size	Flare (C) **Pipe to Suction**	(D)	(F)	(G)	(H)	(I)
403-1	**1/4"** (6.35)	**2-13/32"** (2.42") (61.3)	**5-9/32"** (5.27") (133.9)	**2-25/32"** (2.79") (70.9)	**2-5/16"** (2.3") (58.4)	**3-11/16"** (3.69") (93.6)
403-2	**1/4"** (6.35)	**2-13/32"** (2.42") (61.3)	**5-9/32"** (5.27") (133.9)	**2-25/32"** (2.79") (70.9)	**2-5/16"** (2.3") (58.4)	**3-11/16"** (3.69") (93.6)
406-1	**1/4"** (6.35)	**2-9/16"** (2.55") (64.8)	**5-11/32"** (5.34") (135.6)	**2-13/16"** (2.8") (71.1)	**2-9/16"** (2.55") (64.8)	**4-3/8"** (4.37") (111)
406-2	**1/4"** (6.35)	**2-9/16"** (2.55") (64.8)	**6-5/8"** (6.64") (168.7)	**2-13/16"** (2.8") (71.1)	**2-9/16"** (2.55") (64.8)	**4-3/8"** (4.37") (111)
407-1	**1/4"** (6.35)	**3-7/16"** (3.44") (87.4)	**6-5/8"** (6.64") (168.5)	**2-7/8"** (2.87") (72.8)	**2-31/32"** (2.96") (75.2)	**5-21/32"** (5.64") (143.3)
407-2	**1/4"** (6.35)	**3-7/16"** (3.44") (87.4)	**7-9/32"** (7.29") (185)	**2-7/8"** (2.87") (72.8)	**2-31/32"** (2.96") (75.2)	**5-21/32"** (5.64") (143.3)
409-1	**1/4"** (6.35)	**3-1/2"** (3.51") (89)	**7-15/32"** (7.46") (189.5)	**3-1/16"** (3.07") (77.9)	**3-11/32"** (3.33") (84.6)	**6-1/2"** (6.52") (165.5)
409-2	**1/4"** (6.35)	**3-1/2"** (3.51") (89)	**8-15/32"** (8.46") (214.9)	**3-1/16"** (3.07") (77.9)	**3-11/32"** (3.33") (84.6)	**6-1/2"** (6.52") (165.5)
412-1	**1/4"** (6.35)	**4-1/32"** (4.03") (102.3)	**9-1/16"** (9.05") (229.9)	**3-11/32"** (3.36") (85.3)	**4-5/32"** (4.15") (105.4)	**8-17/32"** (8.54") (216.8)
412-2	**1/4"** (6.35)	**4-1/32"** (4.03") (102.3)	**10-3/4"** (10.75") (273.1)	**3-11/32"** (3.36") (85.3)	**4-5/32"** (4.15") (105.4)	**8-17/32"** (8.54") (216.8)
415-1	**3/8"** (9.525)	**4-15/16"** (4.95") (125.6)	**10-3/32"** (10.09") (256.3)	**5-21/32"** (5.67") (143.9)	**5-7/16"** (5.45") (138.4)	**11-25/32"** (11.8") (299.6)
418-1	**3/8"** (9.525)	**5-9/16"** (5.57") (141.4)	**12-5/8"** (12.63") (320.8)	**6-23/32"** (6.71") (170.5)	**6-3/4"** (6.75") (171.5)	**12-21/32"** (12.67") (321.8)
421-1	**3/8"** (9.525)	**6-9/16"** (6.56") (166.6)	**14-1/8"** (14.12") (358.6)	**7-1/16"** (7.05") (179)	**7-1/4"** (7.25") (184.2)	**14-7/8"** (14.86") (377.5)

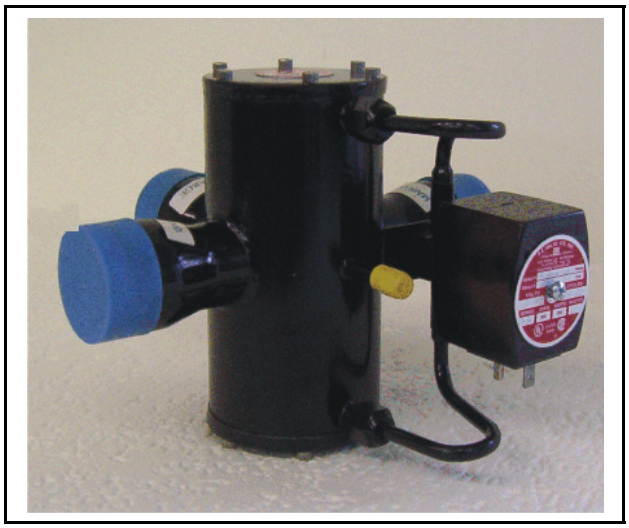

500 Series Heat Reclaim 4 Way Valves

Sizes 03 Thru 21

½" Thru 3-1/8" Line Sizes

Valve Operation (4 Way)

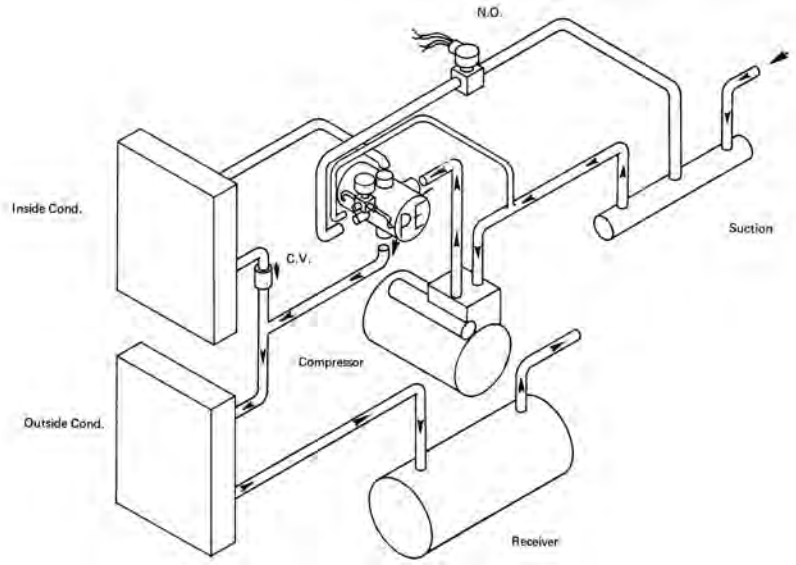

500 Series

Eliminates the need for additional solenoid valves. This valve may be used in a system with parallel condensers. The discharge is routed to one condenser or the other while the condenser not in use is pumped out to suction.

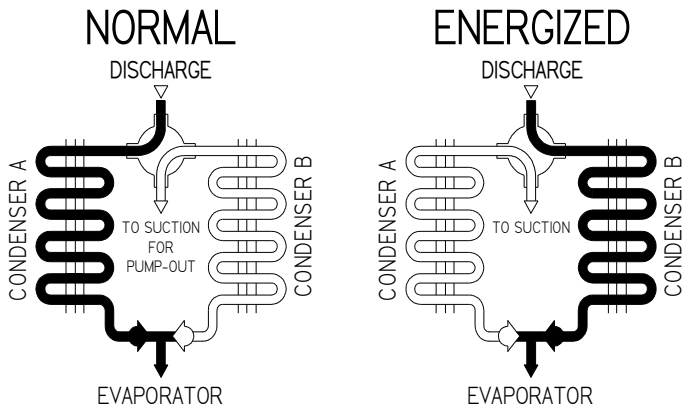

Valve Sizing

Valve Size	Porting	Connections ODF (mm) (A)	MOPD (bar)	Max Working Pressure	Weight lbs. (kg.) Net	Ship
503-1	Full	**5/8"** (15.88)	**500** (34.47)	**650** (44.82)	**2.75** (1.248)	**3.25** (1.474)
503-2	Same as above	**3/4"** (19.05)	**500** (34.47)	**650** (44.82)	**2.75** (1.248)	**3.25** (1.474)
506-1	Full	**7/8"** *(22.225)*	**500** (34.47)	**650** (44.82)	**4.9** (2.22)	**5.5** (2.49)
506-2	Same as above	**1-1/8"** *(28.575)*	**500** (34.47)	**650** (44.82)	**4.9** (2.22)	**5.5** (2.49)
507-1	Full	**1-1/8"** *(28.575)*	**500** (34.47)	**650** (44.82)	**7.2** (3.27)	**8** (3.63)
507-2	Same as above	**1-3/8"** *(34.925)*	**500** (34.47)	**650** (44.82)	**7.2** (3.27)	**8** (3.63)
509-1	Full	**1-3/8"** *(34.925)*	**500** (34.47)	**650** (44.82)	**8.7** (3.94)	**9.5** (4.31)
509-2	Same as above	**1-5/8"** *(41.275)*	**500** (34.47)	**650** (44.82)	**8.7** (3.94)	**9.5** (4.31)
512-1	Full	**1-5/8"** *(41.275)*	**500** (34.47)	**650** (44.82)	**17** (7.71)	**18.2** (8.26)
512-2	Same as above	**2-1/8"** *(53.975)*	**500** (34.47)	**650** (44.82)	**17** (7.71)	**18.2** (8.26)
515-1	Full	**2-1/8"** *(53.975)*	**500** (34.47)	**650** (44.82)	**49.5** (22.453)	**59** (26.762)
518-1	Full	**2-5/8"** *(66.675)*	**500** (34.47)	**650** (44.82)	**81.9** (37.149)	**91.8** (941.64)
521-1	Full	**3-1/8"** *(79.375)*	**500** (34.47)	**650** (44.82)	**91** (41.277)	**102** (46.266)

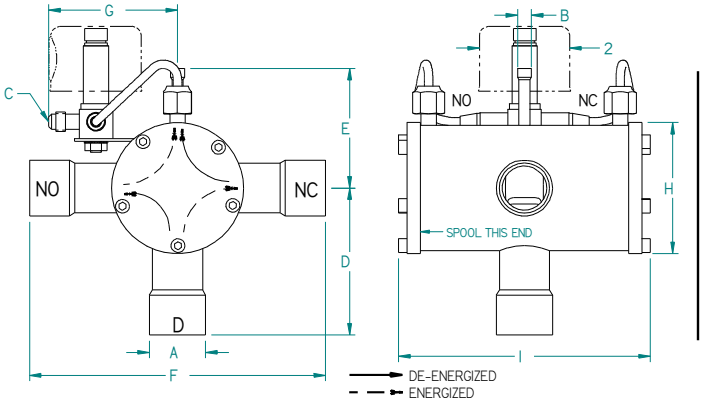

Sizes 03 thru 12

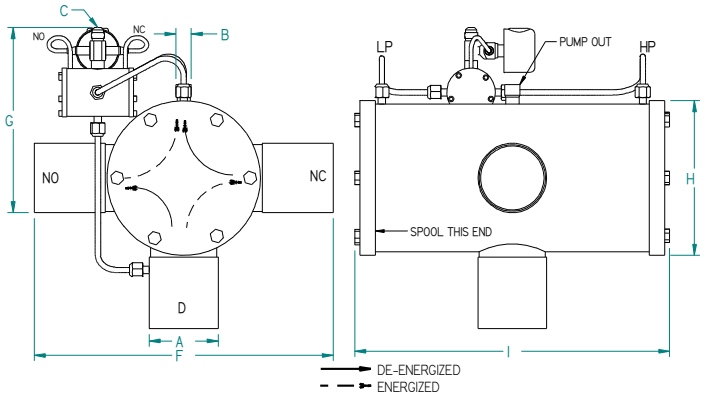

Sizes 15 thru 21

Valve Dimensions – nominal inches (actual) (mm)

Size	Pump Out (B)	Flare (C) **Pipe to Suction**	(D)	(E)	(F)	(G)	(H)	(I)
503-1	**1/4"** (6.35)	**1/4"** (6.35)	**2-13/32"** (2.42") (61.3)	***2-15/32"*** *(2.47")* *(62.8)*	**5-9/32"** (5.27") (133.9)	**2-25/32"** (2.79") (70.9)	**2-5/16"** (2.3") (58.4)	**3-11/16"** (3.69") (93.6)
503-2	**1/4"** (6.35)	**1/4"** (6.35)	**2-13/32"** (2.42") (61.3)	***2-15/32"*** *(2.47")* *(62.8)*	**5-9/32"** (5.27") (133.9)	**2-25/32"** (2.79") (70.9)	**2-5/16"** (2.3") (58.4)	**3-11/16"** (3.69") (93.6)
506-1	**1/4"** (6.35)	**1/4"** (6.35)	**2-9/16"** (2.55") (64.8)	***2-17/32"*** *(2.54")* *(64.5)*	**5-11/32"** (5.34") (135.6)	**2-13/16"** (2.8") (71.1)	**2-9/16"** (2.55") (64.8)	**4-3/8"** (4.37") (111)
506-2	**1/4"** (6.35)	**1/4"** (6.35)	**2-9/16"** (2.55") (64.8)	***2-17/32"*** *(2.54")* *(64.5)*	**6-5/8"** (6.64") (168.7)	**2-13/16"** (2.8") (71.1)	**2-9/16"** (2.55") (64.8)	**4-3/8"** (4.37") (111)
507-1	**1/4"** (6.35)	**1/4"** (6.35)	**3-7/16"** (3.44") (87.4)	***2-11/16"*** *(2.7")* *(68.6)*	**6-5/8"** (6.64") (168.5)	**2-7/8"** (2.87") (72.8)	**2-31/32"** (2.96") (75.2)	**5-21/32"** (5.64") (143.3)
507-2	**1/4"** (6.35)	**1/4"** (6.35)	**3-7/16"** (3.44") (87.4)	***2-11/16"*** *(2.7")* *(68.6)*	**7-9/32"** (7.29") (185)	**2-7/8"** (2.87") (72.8)	**2-31/32"** (2.96") (75.2)	**5-21/32"** (5.64") (143.3)
509-1	**1/4"** (6.35)	**1/4"** (6.35)	**3-1/2"** (3.51") (89)	***2-7/8"*** *(2.89")* *(73.4)*	**7-15/32"** (7.46") (189.5)	**3-1/16"** (3.07") (77.9)	**3-11/32"** (3.33") (84.6)	**6-1/2"** (6.52") (165.5)
509-2	**1/4"** (6.35)	**1/4"** (6.35)	**3-1/2"** (3.51") (89)	***2-7/8"*** *(2.89")* *(73.4)*	**8-15/32"** (8.46") (214.9)	**3-1/16"** (3.07") (77.9)	**3-11/32"** (3.33") (84.6)	**6-1/2"** (6.52") (165.5)
512-1	**1/4"** (6.35)	**1/4"** (6.35)	**4-1/32"** (4.03") (102.3)	***3-3/16"*** *(3.18")* *(80.9)*	**9-1/16"** (9.05") (229.9)	**3-11/32"** (3.36") (85.3)	**4-5/32"** (4.15") (105.4)	**8-17/32"** (8.54") (216.8)
512-2	**1/4"** (6.35)	**1/4"** (6.35)	**4-1/32"** (4.03") (102.3)	***3-3/16"*** *(3.18")* *(80.9)*	**10-3/4"** (10.75") (273.1)	**3-11/32"** (3.36") (85.3)	**4-5/32"** (4.15") (105.4)	**8-17/32"** (8.54") (216.8)
515-1	**5/8"** (15.875)	**3/8"** (9.525)	**4-15/16"** (4.95") (125.6)	***3-5/8"*** *(3.62")* *(91.8)*	**10-3/32"** (10.09") (256.3)	**5-21/32"** (5.67") (143.9)	**5-7/16"** (5.45") (138.4)	**11-25/32"** (11.8") (299.6)
518-1	**5/8"** (15.875)	**3/8"** (9.525)	**5-9/16"** (5.57") (141.4)	***4-1/8"*** *(4.14")* *(105)*	**12-5/8"** (12.63") (320.8)	**6-23/32"** (6.71") (170.5)	**6-3/4"** (6.75") (171.5)	**12-21/32"** (12.67") (321.8)
521-1	**5/8"** (15.875)	**3/8"** (9.525)	**6-9/16"** (6.56") (166.6)	***4-3/8"*** *(4.38")* *(111.3)*	**14-1/8"** (14.12") (358.6)	**7-1/16"** (7.05") (179)	**7-1/4"** (7.25") (184.2)	**14-7/8"** (14.86") (377.5)

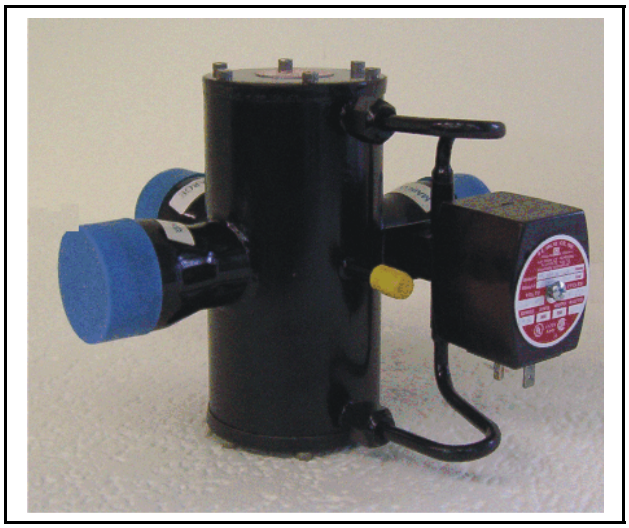

700 Series Heat Reclaim 3-4 Way Valves

Sizes 03 Thru 21
½” Thru 3-1/8” Line Sizes

Valve Operation (3 Way)

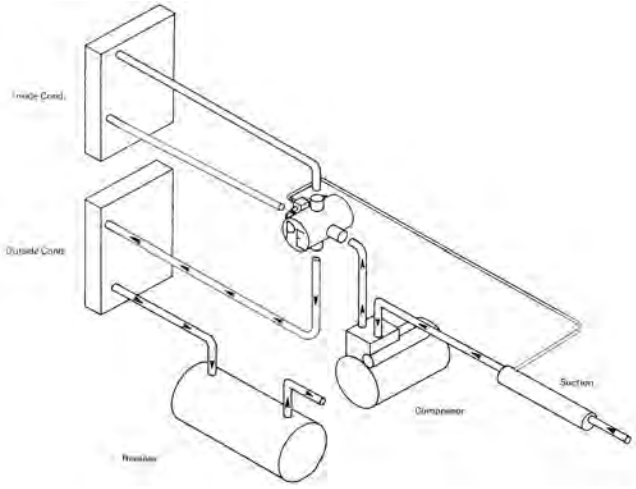

Valve Operation (4 Way)

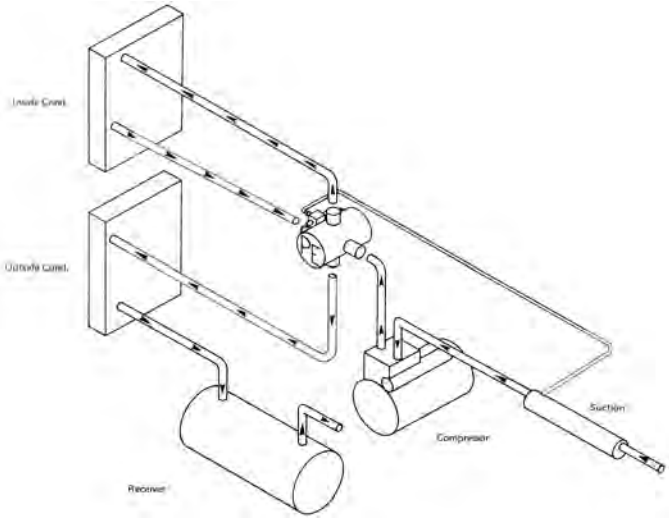

700 Series

Eliminates the need for additional solenoid valves.
(4 way) In the de-energized position, the discharge gas is routed through the main condenser and the auxiliary condenser is pumped out to suction.
(3 way) In the energized position, discharge gas is fed through the valve and the main and into the auxiliary condenser. The pump out line is automatically closed.

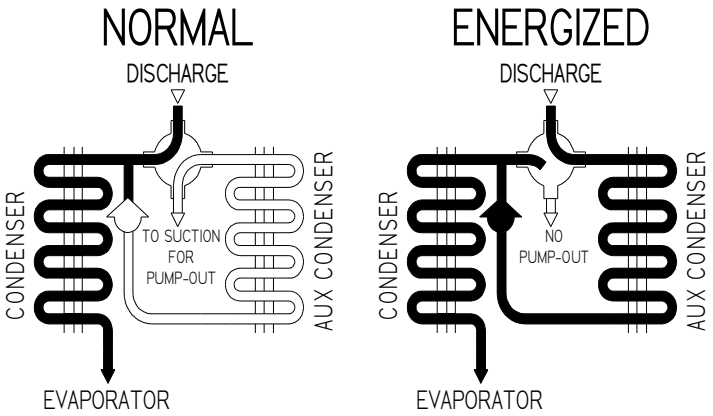

Valve Sizing

Valve Size	Porting	Connections ODF (mm) (A)	MOPD (bar)	Max Working Pressure	Weight lbs. (kg.) Net	Weight lbs. (kg.) Ship
703-1	Full	**5/8"** (15.88)	**500** (34.47)	**650** (44.82)	**2.75** (1.248)	**3.25** (1.474)
703-2	Same as above	**3/4"** (19.05)	**500** (34.47)	**650** (44.82)	**2.75** (1.248)	**3.25** (1.474)
706-1	Full	**7/8"** *(22.225)*	**500** (34.47)	**650** (44.82)	**4.9** (2.22)	**5.5** (2.49)
706-2	Same as above	**1-1/8"** *(28.575)*	**500** (34.47)	**650** (44.82)	**4.9** (2.22)	**5.5** (2.49)
707-1	Full	**1-1/8"** *(28.575)*	**500** (34.47)	**650** (44.82)	**7.2** (3.27)	**8** (3.63)
707-2	Same as above	**1-3/8"** *(34.925)*	**500** (34.47)	**650** (44.82)	**7.2** (3.27)	**8** (3.63)
709-1	Full	**1-3/8"** *(34.925)*	**500** (34.47)	**650** (44.82)	**8.7** (3.94)	**9.5** (4.31)
709-2	Same as above	**1-5/8"** *(41.275)*	**500** (34.47)	**650** (44.82)	**8.7** (3.94)	**9.5** (4.31)
712-1	Full	**1-5/8"** *(41.275)*	**500** (34.47)	**650** (44.82)	**17** (7.71)	**18.2** (8.26)
712-2	Same as above	**2-1/8"** *(53.975)*	**500** (34.47)	**650** (44.82)	**17** (7.71)	**18.2** (8.26)
715-1	Full	**2-1/8"** *(53.975)*	**500** (34.47)	**650** (44.82)	**49.5** (22.453)	**59** (26.762)
718-1	Full	**2-5/8"** *(66.675)*	**500** (34.47)	**650** (44.82)	**81.9** (37.149)	**91.8** (941.64)
721-1	Full	**3-1/8"** *(79.375)*	**500** (34.47)	**650** (44.82)	**91** (41.277)	**102** (46.266)

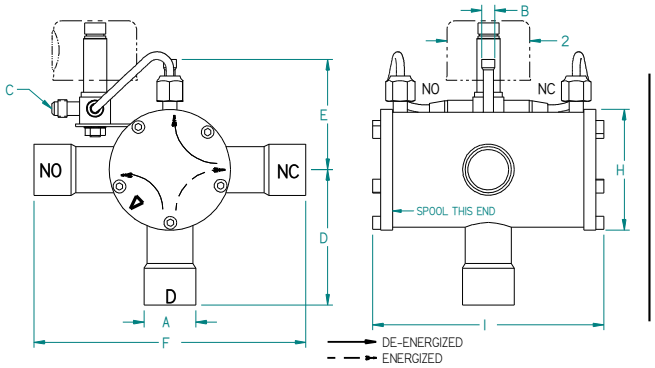

Sizes 03 thru 12

∇ - Index Pin in End Cap

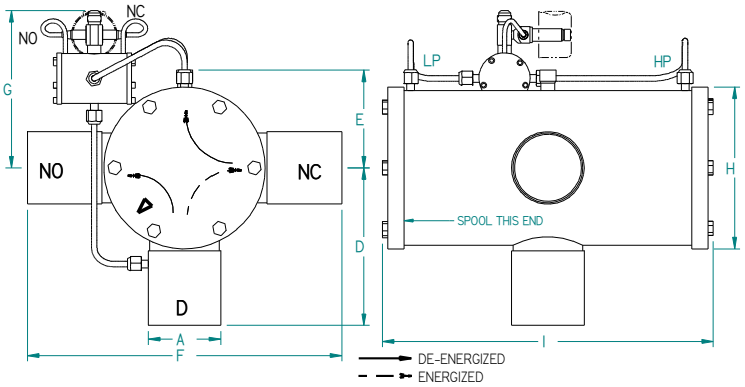

Sizes 15 thru 21

∇ - Index Pin in End Cap

Valve Dimensions – nominal inches (actual) (mm)

Size	Pump Out (B)	Flare (C) **Pipe to Suction**	(D)	(E)	(F)	(G)	(H)	(I)
703-1	**1/4"** (6.35)	**1/4"** (6.35)	**2-13/32"** (2.42") (61.3)	***2-15/32"*** *(2.47")* *(62.8)*	**5-9/32"** (5.27") (133.9)	***2-25/32"*** *(2.79")* *(70.9)*	**2-5/16"** (2.3") (58.4)	**3-11/16"** (3.69") (93.6)
703-2	**1/4"** (6.35)	**1/4"** (6.35)	**2-13/32"** (2.42") (61.3)	***2-15/32"*** *(2.47")* *(62.8)*	**5-9/32"** (5.27") (133.9)	***2-25/32"*** *(2.79")* *(70.9)*	**2-5/16"** (2.3") (58.4)	**3-11/16"** (3.69") (93.6)
706-1	**1/4"** (6.35)	**1/4"** (6.35)	**2-9/16"** (2.55") (64.8)	***2-17/32"*** *(2.54")* *(64.5)*	**5-11/32"** (5.34") (135.6)	***2-13/16"*** *(2.8")* *(71.1)*	**2-9/16"** (2.55") (64.8)	**4-3/8"** (4.37") (111)
706-2	**1/4"** (6.35)	**1/4"** (6.35)	**2-9/16"** (2.55") (64.8)	***2-17/32"*** *(2.54")* *(64.5)*	**6-5/8"** (6.64") (168.7)	***2-13/16"*** *(2.8")* *(71.1)*	**2-9/16"** (2.55") (64.8)	**4-3/8"** (4.37") (111)
707-1	**1/4"** (6.35)	**1/4"** (6.35)	**3-7/16"** (3.44") (87.4)	***2-11/16"*** *(2.7")* *(68.6)*	**6-5/8"** (6.64") (168.5)	***2-7/8"*** *(2.87")* *(72.8)*	**2-31/32"** (2.96") (75.2)	**5-21/32"** (5.64") (143.3)
707-2	**1/4"** (6.35)	**1/4"** (6.35)	**3-7/16"** (3.44") (87.4)	***2-11/16"*** *(2.7")* *(68.6)*	**7-9/32"** (7.29") (185)	***2-7/8"*** *(2.87")* *(72.8)*	**2-31/32"** (2.96") (75.2)	**5-21/32"** (5.64") (143.3)
709-1	**1/4"** (6.35)	**1/4"** (6.35)	**3-1/2"** (3.51") (89)	***2-7/8"*** *(2.89")* *(73.4)*	**7-15/32"** (7.46") (189.5)	***3-1/16"*** *(3.07")* *(77.9)*	**3-11/32"** (3.33") (84.6)	**6-1/2"** (6.52") (165.5)
709-2	**1/4"** (6.35)	**1/4"** (6.35)	**3-1/2"** (3.51") (89)	***2-7/8"*** *(2.89")* *(73.4)*	**8-15/32"** (8.46") (214.9)	***3-1/16"*** *(3.07")* *(77.9)*	**3-11/32"** (3.33") (84.6)	**6-1/2"** (6.52") (165.5)
712-1	**1/4"** (6.35)	**1/4"** (6.35)	**4-1/32"** (4.03") (102.3)	***3-3/16"*** *(3.18")* *(80.9)*	**9-1/16"** (9.05") (229.9)	***3-11/32"*** *(3.36")* *(85.3)*	**4-5/32"** (4.15") (105.4)	**8-17/32"** (8.54") (216.8)
712-2	**1/4"** (6.35)	**1/4"** (6.35)	**4-1/32"** (4.03") (102.3)	***3-3/16"*** *(3.18")* *(80.9)*	**10-3/4"** (10.75") (273.1)	***3-11/32"*** *(3.36")* *(85.3)*	**4-5/32"** (4.15") (105.4)	**8-17/32"** (8.54") (216.8)
715-1	**5/8"** (15.875)	**3/8"** (9.525)	**4-15/16"** (4.95") (125.6)	***3-5/8"*** *(3.62")* *(91.8)*	**10-3/32"** (10.09") (256.3)	***5-21/32"*** *(5.67")* *(143.9)*	**5-7/16"** (5.45") (138.4)	**11-25/32"** (11.8") (299.6)
718-1	**5/8"** (15.875)	**3/8"** (9.525)	**5-9/16"** (5.57") (141.4)	***4-1/8"*** *(4.14")* *(105)*	**12-5/8"** (12.63") (320.8)	***6-23/32"*** *(6.71")* *(170.5)*	**6-3/4"** (6.75") (171.5)	**12-21/32"** (12.67") (321.8)
721-1	**5/8"** (15.875)	**3/8"** (9.525)	**6-9/16"** (6.56") (166.6)	***4-3/8"*** *(4.38")* *(111.3)*	**14-1/8"** (14.12") (358.6)	***7-1/16"*** *(7.05")* *(179)*	**7-1/4"** (7.25") (184.2)	**14-7/8"** (14.86") (377.5)

1300 Series Hot Gas Defrost 3 Way Valves

Sizes 03 Thru 21
½" Thru 3-1/8"

Typical Application
(Hot Gas Defrost)

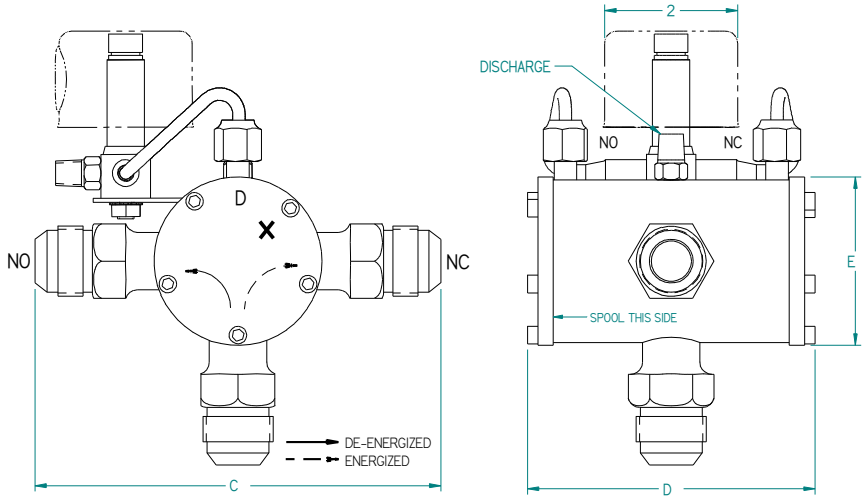

1306-3 and 1309-3 Ammonia Valve

X - Index Pin in End Cap

1300 Series

NORMAL POSITION: The C and NC ports are open through the valve and the NC port is closed off inside the valve. Discharge pressure must be supplied to the 1/4" flare on the side of the valve. The 1/4" flare fitting at the pilot (below the coil) must be piped to the suction side of the compressor.

ENERGIZED POSITION: The C and NC ports are open through the valve and the NO port is closed off inside the valve.

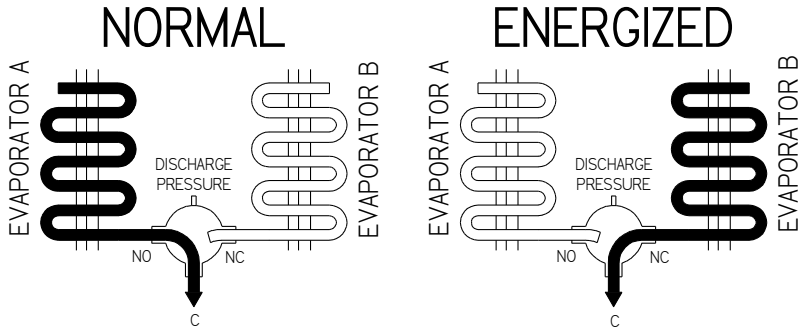

Valve Sizing

Valve Size	Porting	Connections ODF (mm) (A)	MOPD (bar)	Max Working Pressure	Weight lbs. (kg.) Net	Weight lbs. (kg.) Ship
1303-1	Full	**5/8"** (15.88)	**500** (34.47)	**650** (44.82)	**2.75** (1.248)	**3.25** (1.474)
1303-2	Same as above	**3/4"** (19.05)	**500** (34.47)	**650** (44.82)	**2.75** (1.248)	**3.25** (1.474)
1306-1	Full	**7/8"** (22.225)	**500** (34.47)	**650** (44.82)	**4.9** (2.22)	**5.5** (2.49)
1306-2	Same as above	**1-1/8"** (28.575)	**500** (34.47)	**650** (44.82)	**4.9** (2.22)	**5.5** (2.49)
1306-3	Full	**3/4" Male Flare** (19.05)	**500** (34.47)	**650** (44.82)	**4.9** (2.22)	**5.5** (2.49)
1307-1	Full	**1-1/8"** (28.575)	**500** (34.47)	**650** (44.82)	**7.2** (3.27)	**8** (3.63)
1307-2	Same as above	**1-3/8"** (34.925)	**500** (34.47)	**650** (44.82)	**7.2** (3.27)	**8** (3.63)
1309-1	Full	**1-3/8"** (34.925)	**500** (34.47)	**650** (44.82)	**8.7** (3.94)	**9.5** (4.31)
1309-2	Same as above	**1-5/8"** (41.275)	**500** (34.47)	**650** (44.82)	**8.7** (3.94)	**9.5** (4.31)
1309-3	Full	**3/4" Male Flare** (19.05)	**500** (34.47)	**650** (44.82)	**8.7** (3.94)	**9.5** (4.31)
1312-1	Full	**1-5/8"** (41.275)	**500** (34.47)	**650** (44.82)	**17** (7.71)	**18.2** (8.26)
1312-2	Same as above	**2-1/8"** (53.975)	**500** (34.47)	**650** (44.82)	**17** (7.71)	**18.2** (8.26)
1315-1	Full	**2-1/8"** (53.975)	**500** (34.47)	**650** (44.82)	**49.5** (22.453)	**59** (26.762)
1315-2	Same as above	**2-5/8"** (66.675)	**500** (34.47)	**650** (44.82)	**49.5** (22.453)	**59** (26.762)
1318-1	Full	**2-5/8"** (66.675)	**500** (34.47)	**650** (44.82)	**81.9** (37.149)	**91.8** (941.64)
1318-2	Same as above	**3-1/8"** (79.375)	**500** (34.47)	**650** (44.82)	**81.9** (37.149)	**91.8** (941.64)
1321-1	Full	**3-1/8"** (79.375)	**500** (34.47)	**650** (44.82)	**91** (41.277)	**102** (46.266)
1321-2	Same as above	**4-1/8"** (104.78)	**500** (34.47)	**650** (44.82)	**91** (41.277)	**102** (46.266)

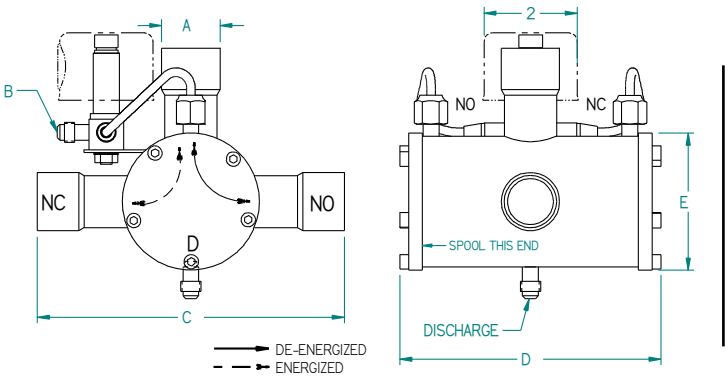

Sizes 03 thru 12

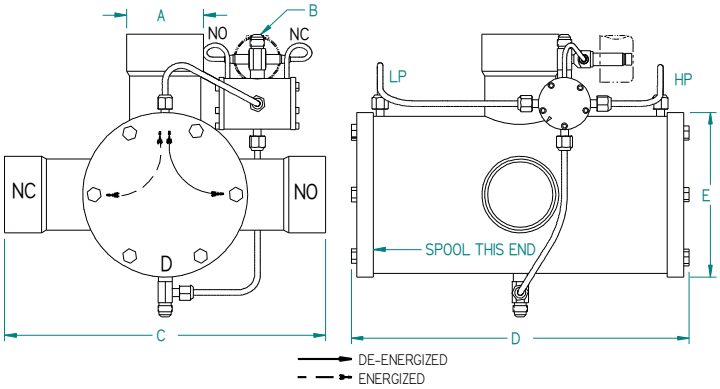

Sizes 15 thru 21

Valve Dimensions – nominal inches (actual) (mm)

Size	**Discharge Fitting**	Flare (B) **Pipe to Suction**	(C)	(D)	(E)
1303-1	**1/4"** (6.35)	**1/4"** (6.35)	**4-27/32"** (4.83") (122.7)	**2-5/16"** (2.3") (58.4)	**3-11/16"** (3.69") (93.6)
1303-2	**1/4"** (6.35)	**1/4"** (6.35)	**4-31/32"** (4.97") (126.2)	**2-5/16"** (2.3") (58.4)	**3-11/16"** (3.69") (93.6)
1306-1	**1/4"** (6.35)	**1/4"** (6.35)	**5-11/32"** (5.34") (135.6)	**2-9/16"** (2.55") (64.8)	**4-3/8"** (4.37") (111)
1306-2	**1/4"** (6.35)	**1/4"** (6.35)	**6-5/8"** (6.64") (168.7)	**2-9/16"** (2.55") (64.8)	**4-3/8"** (4.37") (111)
1306-3	**1/8 – 27 NPT** (3.18)	**1/8 – 27 NPT** (3.18)	**6-5/32"** (6.16") (156.5)	**2-9/16"** (2.55") (64.8)	**4-3/8"** (4.37") (111)
1307-1	**1/4"** (6.35)	**1/4"** (6.35)	**6-5/8"** (6.64") (168.5)	**2-31/32"** (2.96") (75.2)	**5-21/32"** (5.64") (143.3)
1307-2	**1/4"** (6.35)	**1/4"** (6.35)	**7-9/32"** (7.29") (185)	**2-31/32"** (2.96") (75.2)	**5-21/32"** (5.64") (143.3)
1309-1	**1/4"** (6.35)	**1/4"** (6.35)	**7-15/32"** (7.46") (189.5)	**3-11/32"** (3.33") (84.6)	**6-1/2"** (6.52") (165.5)
1309-2	**1/4"** (6.35)	**1/4"** (6.35)	**8-15/32"** (8.46") (214.9)	**3-11/32"** (3.33") (84.6)	**6-1/2"** (6.52") (165.5)
1309-3	**1/8 – 27 NPT** (3.18)	**1/8 – 27 NPT** (3.18)	**6-7/8"** (6.86") (174.2)	**3-11/32"** (3.33") (84.6)	**6-1/2"** (6.52") (165.5)
1312-1	**1/4"** (6.35)	**1/4"** (6.35)	**9-1/16"** (9.05") (229.9)	**4-5/32"** (4.15") (105.4)	**8-17/32"** (8.54") (216.8)
1312-2	**1/4"** (6.35)	**1/4"** (6.35)	**10-3/4"** (10.75") (273.1)	**4-5/32"** (4.15") (105.4)	**8-17/32"** (8.54") (216.8)
1315-1	**3/8"** (9.53)	**3/8"** (9.53)	**10-3/32"** (10.09") (256.3)	**5-7/16"** (5.45") (138.4)	**11-25/32"** (11.8") (299.6)
1315-2	**3/8"** (9.53)	**3/8"** (9.53)	**11-19/32"** (11.59") (294.4)	**5-7/16"** (5.45") (138.4)	**11-25/32"** (11.8") (299.6)
1318-1	**3/8"** (9.53)	**3/8"** (9.53)	**12-5/8"** (12.63") (320.8)	**6-3/4"** (6.75") (171.5)	**12-21/32"** (12.67") (321.8)
1318-2	**3/8"** (9.53)	**3/8"** (9.53)	**13-5/8"** (13.63") (346.2)	**6-3/4"** (6.75") (171.5)	**12-21/32"** (12.67") (321.8)
1321-1	**3/8"** (9.53)	**3/8"** (9.53)	**14-1/8"** (14.12") (358.6)	**7-1/4"** (7.25") (184.2)	**14-7/8"** (14.86") (377.5)
1321-2	**3/8"** (9.53)	**3/8"** (9.53)	**14-1/8"** (14.12") (358.6)	**7-1/4"** (7.25") (184.2)	**14-7/8"** (14.86") (377.5)

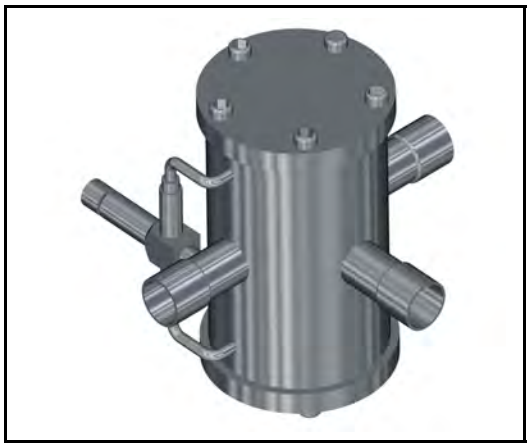

1400 Series
Low Pressure Drop
Heat Reclaim
3 Way Valves

Sizes 06 Thru 12

½” Thru 3-1/8” Line Sizes

Valve Operation
(3 Way)

1400 Series

NORMAL POSITION: The discharge gas goes straight through the valve causing almost no pressure drop. The Reheat/Defrost coil is closed off inside the valve.

ENERGIZED POSITION: The discharge gas turns 90 degrees through the valve going out to the Reheat/Defrost coil. The out port is closed off inside the valve.

Discharge pressure is piped to the small port opposite the Reheat/Defrost port so this valve can be used to shift suction pressure.

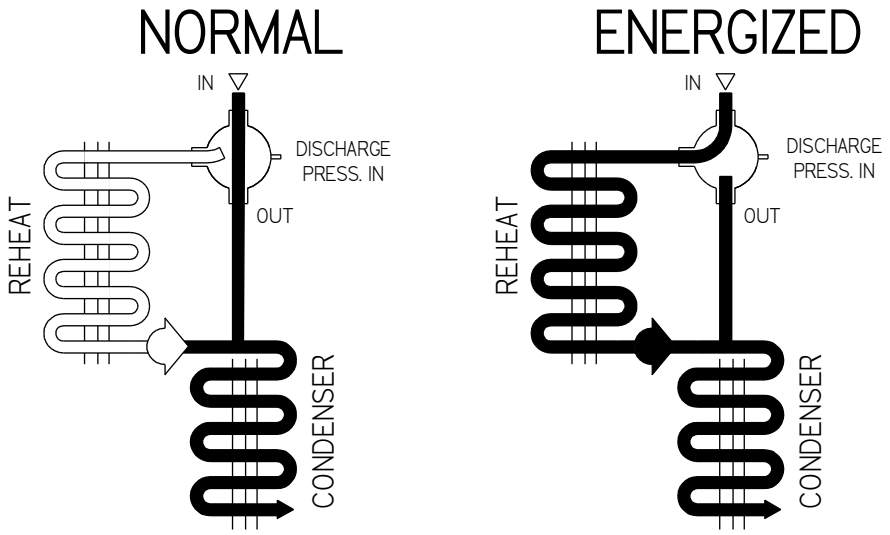

Valve Sizing

Valve Size	Porting	Connections ODF (mm) (A)	Hole Size Thru Spool (mm)	MOPD (bar)	Max Working Pressure (bar)	Weight lbs. Net (kg)	Weight lbs. Ship (kg)
1406-1	Full	**7/8"** (22.23)	**3/4"** (19.05)	**500** (34.47)	**650** (44.82)	**4.9** (2.22)	**5.5** (2.49)
1406-2	Same as above	**1-1/8"** (28.58)	**3/4"** (19.05)	**500** (34.47)	**650** (44.82)	**4.9** (2.22)	**5.5** (2.49)
1407-1	Full	**1-1/8"** (28.58)	**1"** (25.4)	**500** (34.47)	**650** (44.82)	**7.2** (3.27)	**8** (3.63)
1407-2	Same as above	**1-3/8"** (34.93)	**1"** (25.4)	**500** (34.47)	**650** (44.82)	**7.2** (3.27)	**8** (3.63)
1409-1	Full	**1-3/8"** (34.93)	**1-1/8"** (28.6)	**500** (34.47)	**650** (44.82)	**8.7** (3.94)	**9.5** (4.31)
1409-2	Same as above	**1-5/8"** (41.28)	**1-1/8"** (28.6)	**500** (34.47)	**650** (44.82)	**8.7** (3.94)	**9.5** (4.31)
1412-1	Full	**1-5/8"** (41.28)	**1-3/8"** (35.0)	**500** (34.47)	**650** (44.82)	**17** (7.71)	**18.2** (8.26)
1412-2	Same as above	**2-1/8"** (53.98)	**1-3/8"** (35.0)	**500** (34.47)	**650** (44.82)	**17** (7.71)	**18.2** (8.26)
1415-1	Full	**2-1/8"** (53.98)	**2-1/8"** (54.0)	**500** (34.47)	**650** (44.82)	**49.5** (22.453)	**59** (26.762)
1415-2	Same as above	**2-5/8"** (66.68)	**2-1/8"** (54.0)	**500** (34.47)	**650** (44.82)	**49.5** (22.453)	**59** (26.762)
1418-1	Full	**2-5/8"** (66.68)	**2-5/8"** (66.7)	**500** (34.47)	**650** (44.82)	**81.9** (37.149)	**91.8** (941.64)
1418-2	Same as above	**3-1/8"** (79.375)	**2-5/8"** (66.7)	**500** (34.47)	**650** (44.82)	**81.9** (37.149)	**91.8** (941.64)
1421-1	Full	**3-1/8"** (79.375)	**3-1/8"** (79.4)	**500** (34.47)	**650** (44.82)	**91** (41.277)	**102** (46.266)

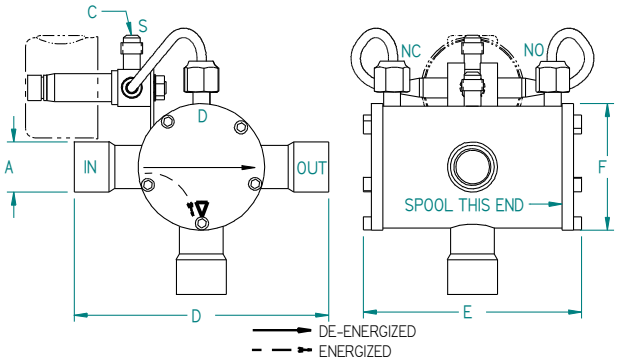

Sizes 06 thru 12

∇- *Index Pin in End Cap*

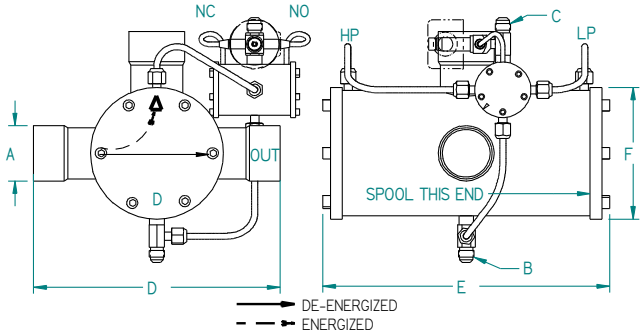

Sizes 15 thru 21

∇ - *Index Pin in End Cap*

Valve Dimensions – nominal inches (actual) (mm)

Size	Flare (B)	Flare (C) **Pipe to Suction**	(D)	(E)	(F)
1406-1	**1/4"** (6.35)	**1/4"** (6.35)	**5-13/32"** (5.4") (137.2)	**2-9/16"** (2.55") (64.8)	**4-3/8"** (4.37") (111)
1406-2	**1/4"** (6.35)	**1/4"** (6.35)	**5-11/32"** (5.34") (135.6)	**2-9/16"** (2.55") (64.8)	**4-3/8"** (4.37") (111)
1407-1	**1/4"** (6.35)	**1/4"** (6.35)	**6-5/8"** (6.64") (168.5)	**2-31/32"** (2.96") (75.2)	**5-21/32"** (5.64") (143.3)
1407-2	**1/4"** (6.35)	**1/4"** (6.35)	**7-3/32"** (7.09") (180)	**2-31/32"** (2.96") (75.2)	**5-21/32"** (5.64") (143.3)
1409-1	**1/4"** (6.35)	**1/4"** (6.35)	**7"** (7.01") (178.1)	**3-11/32"** (3.33") (84.6)	**6-1/2"** (6.52") (165.5)
1409-2	**1/4"** (6.35)	**1/4"** (6.35)	**7-15/32"** (7.46") (189.5)	**3-11/32"** (3.33") (84.6)	**6-1/2"** (6.52") (165.5)
1412-1	**1/4"** (6.35)	**1/4"** (6.35)	**8-1/16"** (8.05") (204.5)	**4-5/32"** (4.15") (105.4)	**8-17/32"** (8.54") (216.8)
1412-2	**1/4"** (6.35)	**1/4"** (6.35)	**9-1/16"** (9.05") (229.9)	**4-5/32"** (4.15") (105.4)	**8-17/32"** (8.54") (216.8)
1415-1	**3/8"** (9.53)	**3/8"** (9.53)	**10-3/32"** (10.09") (256.3)	**5-7/16"** (5.45") (138.4)	**11-25/32"** (11.8") (299.6)
1415-2	**3/8"** (9.53)	**3/8"** (9.53)	**11-19/32"** (11.59") (294.4)	**5-7/16"** (5.45") (138.4)	**11-25/32"** (11.8") (299.6)
1418-1	**3/8"** (9.53)	**3/8"** (9.53)	**12-5/8"** (12.63") (320.8)	**6-3/4"** (6.75") (171.5)	**12-21/32"** (12.67") (321.8)
1418-2	**3/8"** (9.53)	**3/8"** (9.53)	**13-5/8"** (13.63") (346.2)	**6-3/4"** (6.75") (171.5)	**12-21/32"** (12.67") (321.8)
1421-1	**3/8"** (9.53)	**3/8"** (9.53)	**14-1/8"** (14.12") (358.6)	**7-1/4"** (7.25") (184.2)	**14-7/8"** (14.86") (377.5)

1600 Series Flow Divider Valves

Sizes 06 Thru 21
7/8” Thru 3-1/8” Line Sizes

1600 Series

In the normal condition, the discharge gas is routed to (A) and (B) condensers, and the pump out is closed.
In the energized position, the discharge gas is routed through the (A) condenser and the (B) condenser is pumped out to suction. (Eliminates the need for an additional solenoid valve.)

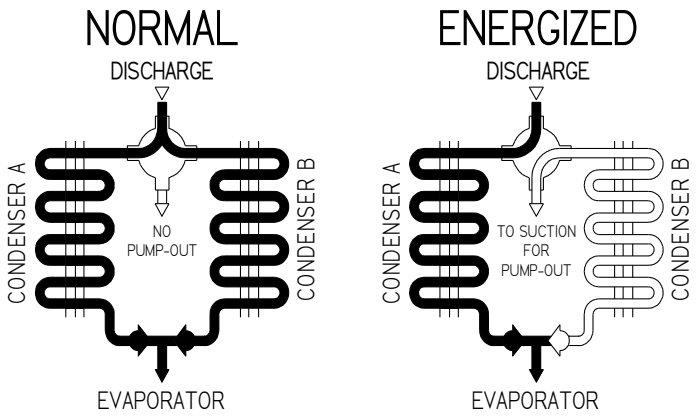

Valve Sizing

Valve Size	Porting	Connections ODF (mm) (A)	MOPD (bar)	Max Working Pressure (bar)	Weight lbs. Net (kg)	Weight lbs. Ship (kg)
1606	Full	**7/8"** *(22.225)*	**500** (34.47)	**650** (44.82)	**4.9** (2.22)	**5.5** (2.49)
1607	Full	**1-1/8"** *(28.575)*	**500** (34.47)	**650** (44.82)	**7.2** (3.27)	**8** (3.63)
1609	Full	**1-3/8"** *(34.925)*	**500** (34.47)	**650** (44.82)	**8.7** (3.94)	**9.5** (4.31)
1612	Full	**1-5/8"** *(41.275)*	**500** (34.47)	**650** (44.82)	**17** (7.71)	**18.2** (8.26)
1615	Full	**2-1/8"** *(53.975)*	**500** (34.47)	**650** (44.82)	**49.5** (22.453)	**59** (26.762)
1618	Full	**2-5/8"** *(66.675)*	**500** (34.47)	**650** (44.82)	**81.9** (37.149)	**91.8** (941.64)
1621	Full	**3-1/8"** *(79.375)*	**500** (34.47)	**650** (44.82)	**91** (41.277)	**102** (46.266)

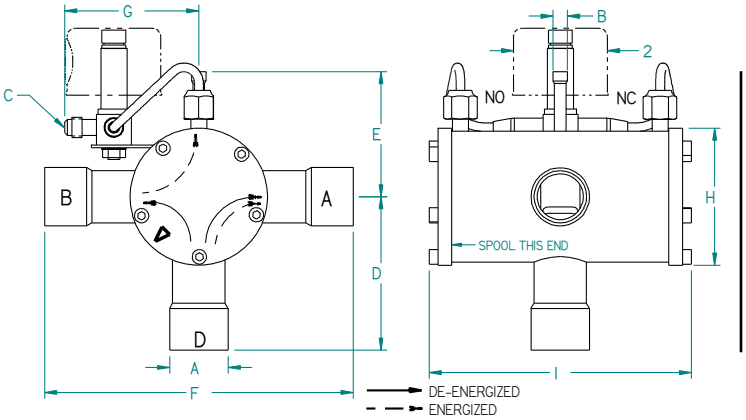

Sizes 06 thru 12

∇- Index Pin in End Cap

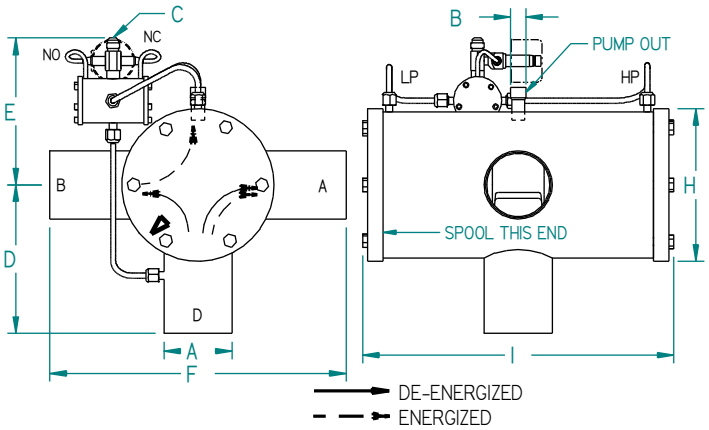

Sizes 15 thru 21

∇- Index Pin in End Cap

Valve Dimensions – nominal inches (actual) (mm)

Size	Pump Out (B)	Flare (C) **Pipe to Suction**	(D)	(E)	(F)	(G)	(H)	(I)
1606	**1/4"** (6.4)	**1/4"** (6.4)	**2-9/16"** (2.55") (64.8)	**2-17/32"** (2.54") (64.5)	**5-11/32"** (5.34") (135.6)	**2-13/16"** (2.8") (71.1)	**2-9/16"** (2.55") (64.8)	**4-3/8"** (4.37") (111)
1607	**1/4"** (6.4)	**1/4"** (6.4)	**3-7/16"** (3.44") (87.4)	**2-11/16"** (2.7") (68.6)	**6-5/8"** (6.64") (168.5)	**2-7/8"** (2.87") (72.8)	**2-31/32"** (2.96") (75.2)	**5-21/32"** (5.64") (143.3)
1609	**1/4"** (6.4)	**1/4"** (6.4)	**3-1/2"** (3.51") (89)	**2-7/8"** (2.89") (73.4)	**7-15/32"** (7.46") (189.5)	**3-1/16"** (3.07") (77.9)	**3-11/32"** (3.33") (84.6)	**6-1/2"** (6.52") (165.5)
1612	**1/4"** (6.4)	**1/4"** (6.4)	**4-1/32"** (4.03") (102.3)	**3-3/16"** (3.18") (80.9)	**9-1/16"** (9.05") (229.9)	**3-11/32"** (3.36") (85.3)	**4-5/32"** (4.15") (105.4)	**8-17/32"** (8.54") (216.8)
1615	**5/8"** (15.9)	**3/8"** (9.53)	**4-15/16"** (4.95") (125.6)	**3-5/8"** (3.62") (91.8)	**10-3/32"** (10.09") (256.3)	**5-21/32"** (5.67") (143.9)	**5-7/16"** (5.45") (138.4)	**11-25/32"** (11.8") (299.6)
1618	**5/8"** (15.9)	**3/8"** (9.53)	**5-9/16"** (5.57") (141.4)	**4-1/8"** (4.14") (105)	**12-5/8"** (12.63") (320.8)	**6-23/32"** (6.71") (170.5)	**6-3/4"** (6.75") (171.5)	**12-21/32"** (12.67") (321.8)
1621	**5/8"** (15.9)	**3/8"** (9.53)	**6-9/16"** (6.56") (166.6)	**4-3/8"** (4.38") (111.3)	**14-1/8"** (14.12") (358.6)	**7-1/16"** (7.05") (179)	**7-1/4"** (7.25") (184.2)	**14-7/8"** (14.86") (377.5)

1700 Series Heat Reclaim 4 Way Valves

Sizes 06 Thru 21

7/8” Thru 3-1/8” Line Sizes

Valve Operation

1700 Series

NORMAL POSITION: Discharge is routed to the main condenser and the auxiliary is pumped out. NO SOLENOID VALVE NEEDED.

ENERGIZED POSITION: Discharge is routed to the auxiliary condenser and the return routed to the main condenser. NO CHECK VALVE NEEDED. The pump out is closed.

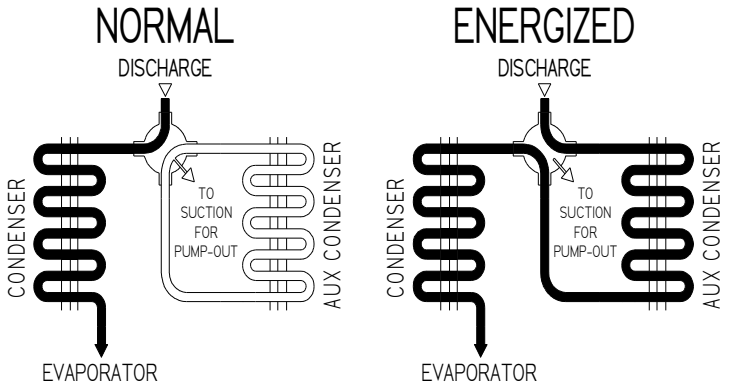

Valve Sizing

Valve Size	Porting	Connections ODF (mm) (A)	Pump Out ODF (mm)	MOPD (bar)	Max Working Pressure (bar)	Weight lbs. Net (kg)	Weight lbs. Ship (kg)
1706-1	Full	**7/8"** *(22.225)*	**1/4"** *(6.35)*	**500** (34.47)	**650** (44.82)	**4.9** (2.22)	**5.5** (2.49)
1706-2	Same as above	**1-1/8"** *(28.575)*	**1/4"** *(6.35)*	**500** (34.47)	**650** (44.82)	**4.9** (2.22)	**5.5** (2.49)
1707-1	Full	**1-1/8"** *(28.575)*	**1/4"** *(6.35)*	**500** (34.47)	**650** (44.82)	**7.2** (3.27)	**8** (3.63)
1707-2	Same as above	**1-3/8"** *(34.925)*	**1/4"** *(6.35)*	**500** (34.47)	**650** (44.82)	**7.2** (3.27)	**8** (3.63)
1709-1	Full	**1-3/8"** *(34.925)*	**1/4"** *(6.35)*	**500** (34.47)	**650** (44.82)	**8.7** (3.94)	**9.5** (4.31)
1709-2	Same as above	**1-5/8"** *(41.275)*	**1/4"** *(6.35)*	**500** (34.47)	**650** (44.82)	**8.7** (3.94)	**9.5** (4.31)
1712-1	Full	**1-5/8"** *(41.275)*	**1/4"** *(6.35)*	**500** (34.47)	**650** (44.82)	**17** (7.71)	**18.2** (8.26)
1712-2	Same as above	**2-1/8"** *(53.975)*	**1/4"** *(6.35)*	**500** (34.47)	**650** (44.82)	**17** (7.71)	**18.2** (8.26)
1715-1	Full	**2-1/8"** *(53.975)*	**1/4"** *(6.35)*	**500** (34.47)	**650** (44.82)	**49.5** (22.453)	**59** (26.762)
1718-1	Full	**2-5/8"** *(66.675)*	**1/4"** *(6.35)*	**500** (34.47)	**650** (44.82)	**81.9** (37.149)	**91.8** (941.64)
1721-1	Full	**3-1/8"** *(79.375)*	**1/4"** *(6.35)*	**500** (34.47)	**650** (44.82)	**91** (41.277)	**102** (46.266)

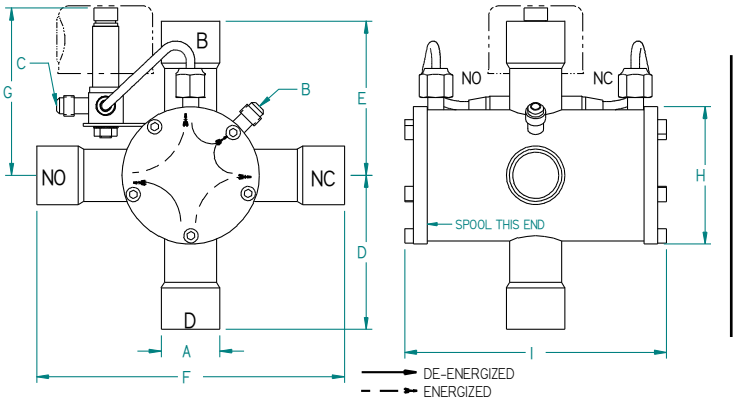

Sizes 06 thru 12

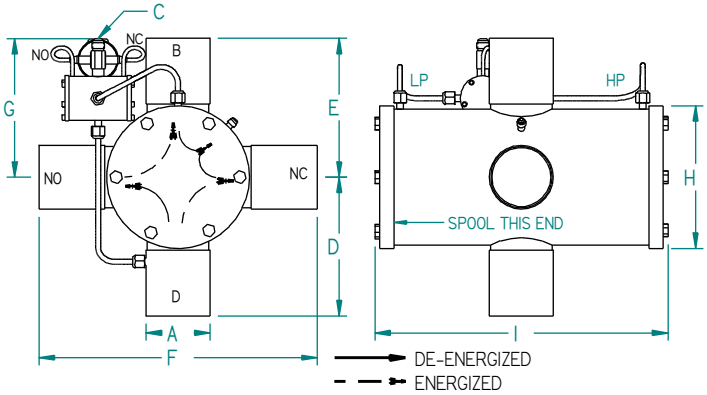

Sizes 15 thru 21

Valve Dimensions – nominal inches (actual) (mm)

Size	Pump Out (B)	Flare (C) **Pipe to Suction**	(D)	(E)	(F)	(G)	(H)	(I)
1706-1	**1/4"** (6.4)	**1/4"** (6.4)	**2-9/16"** (2.55") (64.8)	**2-21/32"** (2.67") (67.8)	**5-11/32"** (5.34") (135.6)	**3-17/32"** (3.55") (90.1)	**2-9/16"** (2.55") (64.8)	**4-3/8"** (4.37") (111)
1706-2	**1/4"** (6.4)	**1/4"** (6.4)	**2-9/16"** (2.55") (64.8)	**3-5/16"** (3.32") (84.3)	**6-5/8"** (6.64") (168.7)	**3-17/32"** (3.55") (90.1)	**2-9/16"** (2.55") (64.8)	**4-3/8"** (4.37") (111)
1707-1	**1/4"** (6.4)	**1/4"** (6.4)	**3-7/16"** (3.44") (87.4)	**3-5/16"** (3.32") (84.3)	**6-5/8"** (6.64") (168.5)	**3-19/32"** (3.6") (91.5)	**2-31/32"** (2.96") (75.2)	**5-21/32"** (5.64") (143.3)
1707-2	**1/4"** (6.4)	**1/4"** (6.4)	**3-7/16"** (3.44") (87.4)	**3-21/32"** (3.64") (92.5)	**7-9/32"** (7.29") (185)	**3-19/32"** (3.6") (91.5)	**2-31/32"** (2.96") (75.2)	**5-21/32"** (5.64") (143.3)
1709-1	**1/4"** (6.4)	**1/4"** (6.4)	**3-1/2"** (3.51") (89)	**3-23/32"** (3.73") (94.7)	**7-15/32"** (7.46") (189.5)	**3-21/32"** (3.67") (93.2)	**3-11/32"** (3.33") (84.6)	**6-1/2"** (6.52") (165.5)
1709-2	**1/4"** (6.4)	**1/4"** (6.4)	**3-1/2"** (3.51") (89)	**4-7/32"** (4.23") (107.4)	**8-15/32"** (8.46") (214.9)	**3-21/32"** (3.67") (93.2)	**3-11/32"** (3.33") (84.6)	**6-1/2"** (6.52") (165.5)
1712-1	**1/4"** (6.4)	**1/4"** (6.4)	**4-1/32"** (4.03") (102.3)	**4-17/32"** (4.53") (115)	**9-1/16"** (9.05") (229.9)	**4-1/8"** (4.14") (105.1)	**4-5/32"** (4.15") (105.4)	**8-17/32"** (8.54") (216.8)
1712-2	**1/4"** (6.4)	**1/4"** (6.4)	**4-1/32"** (4.03") (102.3)	**5-3/8"** (5.38") (136.6)	**10-3/4"** (10.75") (273.1)	**4-1/8"** (4.14") (105.1)	**4-5/32"** (4.15") (105.4)	**8-17/32"** (8.54") (216.8)
1715-1	**1/4"** (6.4)	**3/8"** (9.53)	**4-15/16"** (4.95") (125.6)	**5-1/32"** (5.05") (128.1)	**10-3/32"** (10.09") (256.3)	**5-21/32"** (5.67") (143.9)	**5-7/16"** (5.45") (138.4)	**11-25/32"** (11.8") (299.6)
1718-1	**1/4"** (6.4)	**3/8"** (9.53)	**5-9/16"** (5.57") (141.4)	**6-5/16"** (6.32") (160.4)	**12-5/8"** (12.63") (320.8)	**6-23/32"** (6.71") (170.5)	**6-3/4"** (6.75") (171.5)	**12-21/32"** (12.67") (321.8)
1721-1	**1/4"** (6.4)	**3/8"** (9.53)	**6-9/16"** (6.56") (166.6)	**7-1/16"** (7.06") (179.3)	**14-1/8"** (14.12") (358.6)	**7-1/16"** (7.05") (179)	**7-1/4"** (7.25") (184.2)	**14-7/8"** (14.86") (377.5)

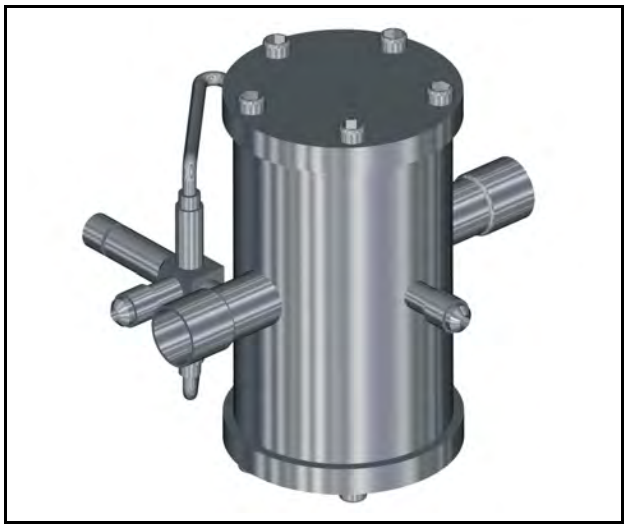

1800 Series Low Pressure Drop On/Off Valves

Sizes 03 Thru 21
5/8” Thru 3-1/8” Line Sizes

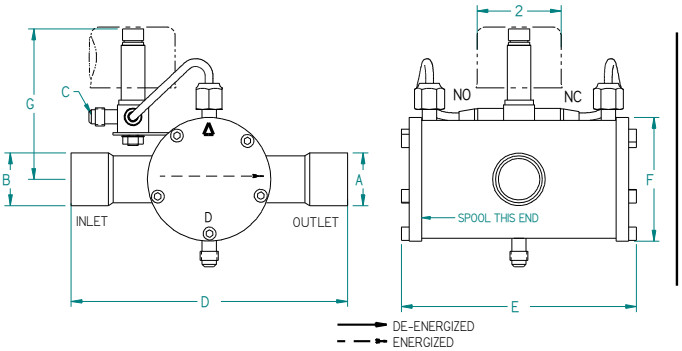

Sizes 03 thru 12

∇ - Index Pin in End Cap

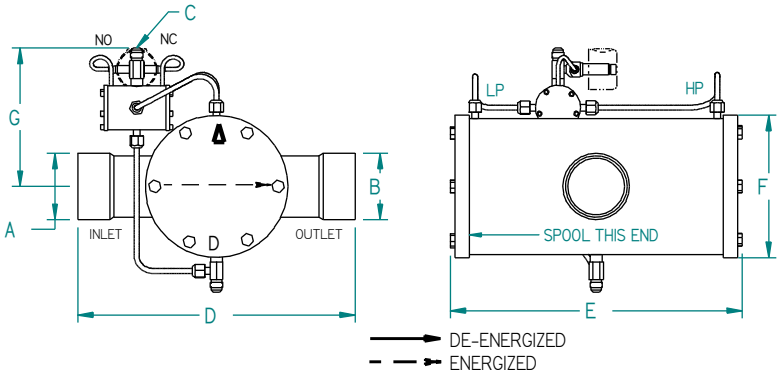

Sizes 15 thru 21

∇ - Index Pin in End Cap

Valve Dimensions – nominal inches (actual) (mm)

	Connections ODF (mm)		Hole Size	**Pipe to Suction**				
Size	Inlet (A)	Outlet (B)	Thru Spool	Flare (C)	(D)	(E)	(F)	(G)
1803	**5/8"** (15.9)	**5/8"** (15.9)	**5/8"** (15.9)	**1/4”** (6.4)	**5-9/32"** (5.27") (133.9)	**2-5/16"** (2.3") (58.4)	**3-11/16"** (3.69") (93.6)	**3-1/32"** (3.02") (76.7)
1806	**7/8"** (22.2)	**7/8"** (22.2)	**7/8"** (22.2)	**1/4”** (6.4)	**5-11/32"** (5.34") (135.6)	**2-9/16"** (2.55") (64.8)	**4-3/8"** (4.37") (111)	**2-13/16"** (2.8") (71.1)
1807	**1-1/8"** (28.6)	**1-1/8"** (28.6)	**1-1/8"** (28.6)	**1/4”** (6.4)	**6-5/8"** (6.64") (168.5)	**2-31/32"** (2.96") (75.2)	**5-21/32"** (5.64") (143.3)	**2-7/8"** (2.87") (72.8)
1809	**1-3/8"** (35.0)	**1-3/8"** (35.0)	**1-3/8"** (35.0)	**1/4”** (6.4)	**7-15/32"** (7.46") (189.5)	**3-11/32"** (3.33") (84.6)	**6-1/2"** (6.52") (165.5)	**3-1/16"** (3.06") (77.8)
1812	**1-5/8"** (41.3)	**1-5/8"** (41.3)	**1-5/8"** (41.3)	**1/4”** (6.4)	**9-1/16"** (9.05") (229.9)	**4-5/32"** (4.15") (105.4)	**8-17/32"** (8.54") (216.8)	**3-11/32"** (3.36") (85.3)
1815	**2-1/8"** (54.0)	**2-1/8"** (54.0)	**2-1/8"** (54.0)	**3/8”** (9.5)	**10-3/32"** (10.09") (256.3)	**5-7/16"** (5.45") (138.4)	**11-25/32"** (11.8") (299.6)	**5-21/32"** (5.67") (143.9)
1818	**2-5/8"** (66.7)	**2-5/8"** (66.7)	**2-5/8"** (66.7)	**3/8”** (9.5)	**12-5/8"** (12.63") (320.8)	**6-3/4"** (6.75") (171.5)	**12-21/32"** (12.67") (321.8)	**6-23/32"** (6.71") (170.5)
1821	**3-1/8"** (79.4)	**3-1/8"** (79.4)	**3-1/8"** (79.4)	**3/8”** (9.5)	**14-1/8"** (14.12") (358.6)	**7-1/4"** (7.25") (184.2)	**14-7/8"** (14.86") (377.5)	**7-1/16"** (7.05") (179)

NOTE: Specify open or closed valve

Suggested Oil Guide
Stationary Refrigeration Applications

Direct Expansion Applications

Refrigerant	Lubricant
R-12 ①	MO or AB
●134a (R-134a) ③	POE
●MP39 (R-401a) ②	MO or AB
●409A (R-409a) ②	MO or AB
R-500 ①	MO or AB
●MP66 (R-401B) ②	MO or AB
R-13 ①	MO or AB
R-503 ①	MO or AB
R-23 ③	POE
●95 (R-508B) ④	POE

NOTE: ALL PE Valves are shipped with mineral oil unless otherwise requested.

Refrigerant	Lubricant
R-502 ①	MO or AB
●HP62 (R-404A) ③	POE
●507 (R-507) ③	POE
●HP80 (R-402A) ②	AB
●408A (R-408A) ②	AB
●HP81 (R-402B) ②	MO or AB
R-22 ②	MO or AB
●407C (R-407C) ③	POE
●410A (R-410A) ③ New Equipment Design	POE

MO = Mineral Oil
AB = Alkybenzene
POE = Polyol Ester
● Suva® Refrigerants
① CFC Refrigerant
② HCFC Refrigerant
③ HFC Refrigerant
④ PFC Refrigerant
* HFC refrigerants are also compatible with POE lubricants. Some fractional horsepower replacement compressors are shipped with POE.

Suva® HP62, HP80, 408A, 507, and HP81 are compared to R-502.
Suva® MP39, MP66, 409A, and R-134a are compared to R-12.
Suva® 407C is compared to R-22.
Suva® 95 is compared to R-503.

+ is increase
- is decrease
This information is intended to serve as a guide, the actual performance may vary.

Refrigerant	Discharge Pressure (psi)	Suction Pressure (psi)	Discharge Temperature (F)	Refrigeration Capacity (%)	Expected Superheat (F)
134a	+10	-2	-10	-10	-4
MP39	+20	Same	+25	+10	-3
MP66	+30	+2	+30	+15	-1
409A	+25	Same	+30	+10	-4
HP80	+40	+5	-5	+15	+4
HP81	+30	+5	+15	+15	Same
408A	+5	Same	+20	+5	-3
HP62	+20	Same	-10	Same	+2
507	+30	Same	-15	Same	+4
407C	+15	Same	-15	Same	+1
95	+2	Same	-40	-2	Same
410A	+160	+50	Same or lower	+15	Same

DISCHARGE CAPACITIES (TONS)

Suction Temp	Valve Size	R-134a						R-22						R-410a					
		PSI: 1 KPA: 6.89	PSI: 2 KPA: 13.79	PSI: 3 KPA: 20.68	PSI: 4 KPA: 27.58	PSI: 5 KPA: 34.47	PSI: 6 KPA: 41.37	PSI: 1 KPA: 6.89	PSI: 2 KPA: 13.79	PSI: 3 KPA: 20.68	PSI: 4 KPA: 27.58	PSI: 5 KPA: 34.47	PSI: 6 KPA: 41.37	PSI: 1 KPA: 6.89	PSI: 2 KPA: 13.79	PSI: 3 KPA: 20.68	PSI: 4 KPA: 27.58	PSI: 5 KPA: 34.47	PSI: 6 KPA: 41.37
+40°F +4°C	**6**	9.3	11.3	13	14.3	15.2	16	12	16.5	20	23	25.5	27	13.8	19	23	26.4	29.3	31
	7	16	20	23	25	26.5	28.5	21.5	29	36	40.5	45	48	24.7	33.3	41.4	46.5	51.7	55.2
	9	23	29	33	36	38	40	31	42	52	58	66	70	35.6	48.3	59.8	66.7	76	80.5
	12	32.5	40.5	46	50	54	58	43	59	72	82	92	98	49.4	67.8	82.8	96.3	105.8	112.7
0°F -18°C	**6**	8.5	10.2	11.8	13	14	14.6	11.6	15.8	19	21.8	24	26	13.3	18.1	21.8	25	27.6	30
	7	14.5	17.8	20.5	23	24.2	25	20.5	28	34	38	42.5	46	23.5	32.2	39	43.7	48.9	53
	9	21	26	30	33	35	37	30	40	49	56	62	66	34.5	46	56.3	64.4	71.3	76
	12	30	36	43	46	50	52	41.5	56	68	78	86	93	47.7	64.4	78.2	89.7	99	107
-40°F -40°C	**6**	7.8	9.3	10.8	11.9	12.8	13.7	11	15	18.3	21	23	25	12.6	17.2	21	24.1	26.4	28.75
	7	13.2	16.5	19	21	22.5	24	19.5	21	32.5	37	41	44	22.4	24.1	37.3	42.5	47.1	50.6
	9	19.2	24	28	30	32	34	28	38.5	47	54	59	64	32.2	44.2	54	62.1	67.8	73.6
	12	27	33	39	42	46	48	39	54	65	74	82	88	44.8	62.1	74.75	85	94.3	101

Suction Temp	Valve Size	R-134a				R-22				R-410a			
		PSI: 0.5 KPA: 3.45	PSI: 1 KPA: 6.89	PSI: 2 KPA: 13.79	PSI: 3 KPA: 20.68	PSI: 0.5 KPA: 3.45	PSI: 1 KPA: 6.89	PSI: 2 KPA: 13.79	PSI: 3 KPA: 20.68	PSI: 0.5 KPA: 3.45	PSI: 1 KPA: 6.89	PSI: 2 KPA: 13.79	PSI: 3 KPA: 20.68
+40°F +4°C	**15**	66	80	93	100	84	113	140	160	96.6	130	161	184
	18	90	105	120	130	112	160	193	218	129	184	222	251
	21	130	154	178	195	161	221	270	300	185	254	310	345
0°F -18°C	**15**	60	72	85	92	82	110	130	150	94.3	126	150	173
	18	80	95	110	118	111	145	179	210	128	167	206	242
	21	115	140	160	174	160	212	253	288	184	244	291	331
-40°F -40°C	**15**	54	66	78	83	78	105	129	143	89.7	121	148	164
	18	74	90	100	107	109	145	179	197	125	167	206	227
	21	105	129	148	154	151	205	250	272	174	236	288	313

SUCTION CAPACITIES (TONS)

			R-134a					R-22						R-410a					
Suction Temp	Valve Size	PSI: 0.5 KPA: 3.45	PSI: 1 KPA: 6.89	PSI: 2 KPA: 13.79	PSI: 3 KPA: 20.68	PSI: 4 KPA: 27.58	PSI: 5 KPA: 34.47	PSI: 0.5 KPA: 3.45	PSI: 1 KPA: 6.89	PSI: 2 KPA: 13.79	PSI: 3 KPA: 20.68	PSI: 4 KPA: 27.58	PSI: 5 KPA: 34.47	PSI: 0.5 KPA: 3.45	PSI: 1 KPA: 6.89	PSI: 2 KPA: 13.79	PSI: 3 KPA: 20.68	PSI: 4 KPA: 27.58	PSI: 5 KPA: 34.47
+40F +4C	**6**	2.95	4.1	6	7.5	8.5	9.5	5.4	7.2	10	12	13.8	15	6.2	8.3	11.5	13.8	15.9	17.25
	7	5.4	7.4	10.9	13.6	15.5	17.2	9.3	12.3	17	20.5	23.8	26	10.7	14.1	19.5	23.6	27.4	30
	9	7.6	10.5	15.4	19.3	22	24.5	12.8	17	23.5	28.5	33	36	14.7	19.5	27	32.75	38	41.4
	12	10.8	14.9	21.8	27	31	34.5	18	24	33.5	40	46	50.5	20.7	27.6	38.5	46	53	58
+20F -7C	**6**	2.3	3.25	4.75	5.9	6.8	7.3	4.3	5.9	8	9.6	10.8	12	5	6.8	9.2	11	12.4	13.8
	7	4.2	5.9	8.6	10.9	12.3	13.3	7.2	10	13.6	16.5	18.6	21	8.3	11.5	15.6	19	21.4	24.1
	9	6	8.4	12.2	15.4	17.5	18.8	10	14	19	22.8	26	29	11.5	16	21.8	26.2	30	33.3
	12	8.4	11.9	17.1	21.6	24.8	26.5	14	19.8	26.8	32	36.5	41	16	22.8	30.8	36.8	42	47.1
0F -18C	**6**	1.95	2.6	3.7	4.6	5.1	5.4	3.3	4.6	6.4	7.6	8.4	9.4	3.7	5.3	7.4	8.7	9.7	10.8
	7	3.55	4.8	6.8	8.3	9.3	9.8	5.4	8	11	13	14.4	16	6.2	9.2	12.6	15	16.5	18.4
	9	5	6.8	9.6	11.8	13	14	7.6	11	15	18	20	22.5	8.7	12.6	17.2	20.7	23	25.9
	12	7.1	9.6	13.5	16.8	18.5	19.5	10.6	15.5	21.2	25.2	28.3	32	12.2	17.8	24.4	29	32.5	36.8
-20F -29C	**6**	1.6	2.08	2.8	3.3	3.55	3.6	2.6	3.6	4.8	5.6	6.4	7.2	3	4.1	5.5	6.4	7.4	8.3
	7	2.9	3.8	5.6	6	6.4	6.6	4.4	6.2	8.2	9.6	10	12	5	7.1	9.4	11	11.5	13.8
	9	4.1	5.4	7.3	8.6	9.2	9.4	6	8.5	11.5	13.3	15	16.8	6.9	9.8	13.2	15.3	17.2	19.3
	12	5.8	7.6	10.3	12	12.9	13.2	8.5	10.2	16.2	18.8	21	24	9.8	11.7	18.6	21.6	24.1	27.6
-40F -40C	**6**	1.2	1.5	1.98	2	2.15	2.25	1.9	2.6	3.4	3.9	4.3	4.6	2.2	3	3.9	4.5	4.9	5.3
	7	2.05	2.75	3.6	4	4.05	4.1	3.3	4.4	5.6	6.8	7.4	8	3.8	5	6.4	7.8	8.5	9.2
	9	2.91	3.9	5.1	5.6	5.7	5.8	4.6	6.2	8	9.4	10.4	11.6	5.3	7.1	9.2	10.8	12.3	13.3
	12	4.1	5.5	7.2	8	8.2	8.3	6.4	8.6	11.2	13	14.5	16.2	7.3	9.9	12.9	15	16.7	18.6

Suction Temp	Valve Size	R-134a				R-22				R-410a			
		PSI: 0.5 KPA: 3.45	PSI: 1 KPA: 6.89	PSI: 2 KPA: 13.79	PSI: 3 KPA: 20.68	PSI: 0.5 KPA: 3.45	PSI: 1 KPA: 6.89	PSI: 2 KPA: 13.79	PSI: 3 KPA: 20.68	PSI: 0.5 KPA: 3.45	PSI: 1 KPA: 6.89	PSI: 2 KPA: 13.79	PSI: 3 KPA: 20.68
+40F +4C	**15**	21.5	29.7	42.9	54	36.2	48	66	80	41.6	55	76	94.5
	18	29	41	60	73	49.5	64.8	89	106	56.9	74.5	102	122
	21	41.2	56	82	102	69.8	92	124	148	80.3	106	143	170
+20F -7C	**15**	17	23.5	34	43	28.1	38	53	64	32.3	43.7	61	74
	18	23.4	32.5	47.5	60	37.9	52.4	70.8	87	43.6	60.3	81.5	100
	21	32.5	45.4	65	82	51.8	74	100	119	59.6	85	115	137
0F -18C	**15**	15.1	18.7	27.5	33	21	31.2	42.4	50	24.1	35.9	48.75	57.5
	18	20	26	38	45	28.6	42	56	67	32.9	48.3	64.5	77
	21	28.1	36	52	64	40	68	79	95	46	78	91	109
-20F -29C	**15**	11.8	15.3	20.5	24	16.8	23.8	32	37	19.3	27.4	36.8	42.5
	18	15.9	21	28.6	33.5	22.8	32.2	44	50	26.2	37	50.6	57.5
	21	22.5	29.3	39.4	46	32	45.4	62	70	36.8	52.2	71	80
-40F -40C	**15**	8.3	11.1	14.2	15.5	12.8	17.2	22	26	14.7	19.8	25.3	30
	18	11.4	15.2	19.8	21.6	17.4	23.4	30	35	20	26.9	34.5	40
	21	16	21.1	27.5	30	24.4	32.8	44.4	49	28	37.7	51	56.3

PE Valve Company, Inc.
485 Walnut Hill Road
Campobello, SC 29322
www.pevalve.com

Phone: (864) 472-9091
Fax: (864) 472-9119

Email: stancannon@pevalve.com
1/11/13